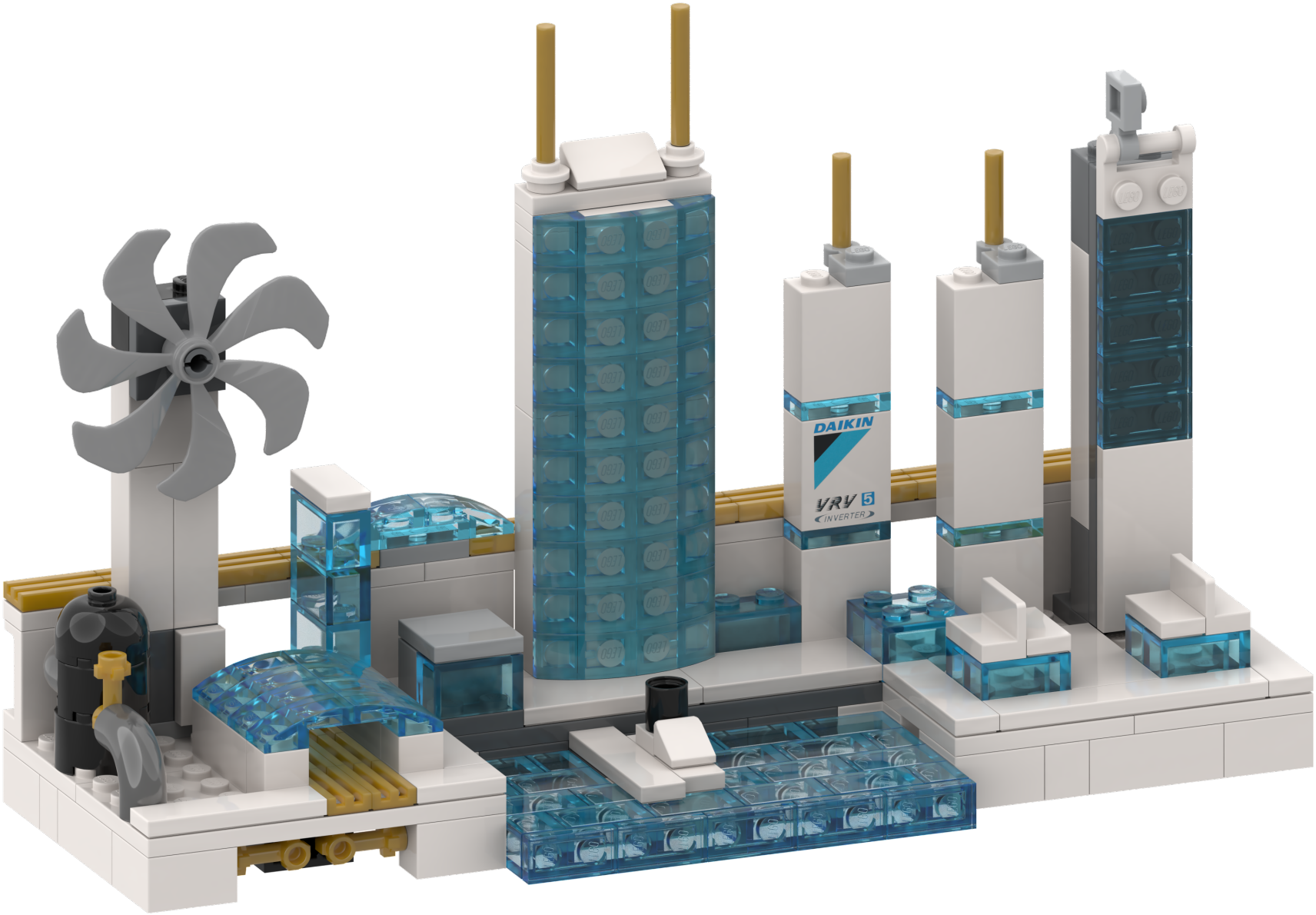
DAIKIN
VRV 5
INVERTER

1

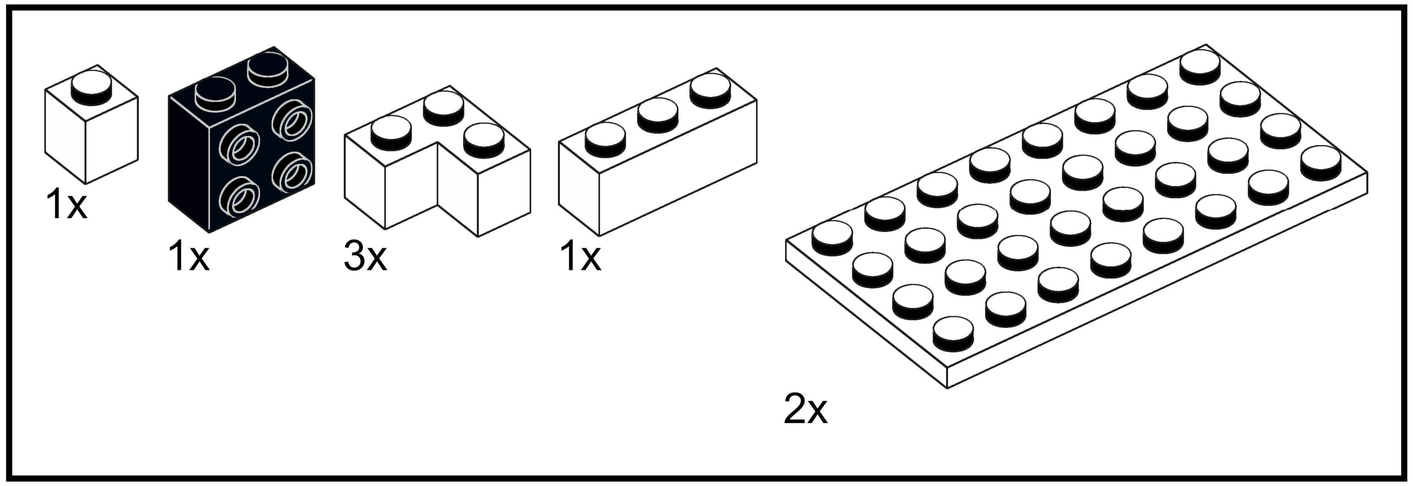

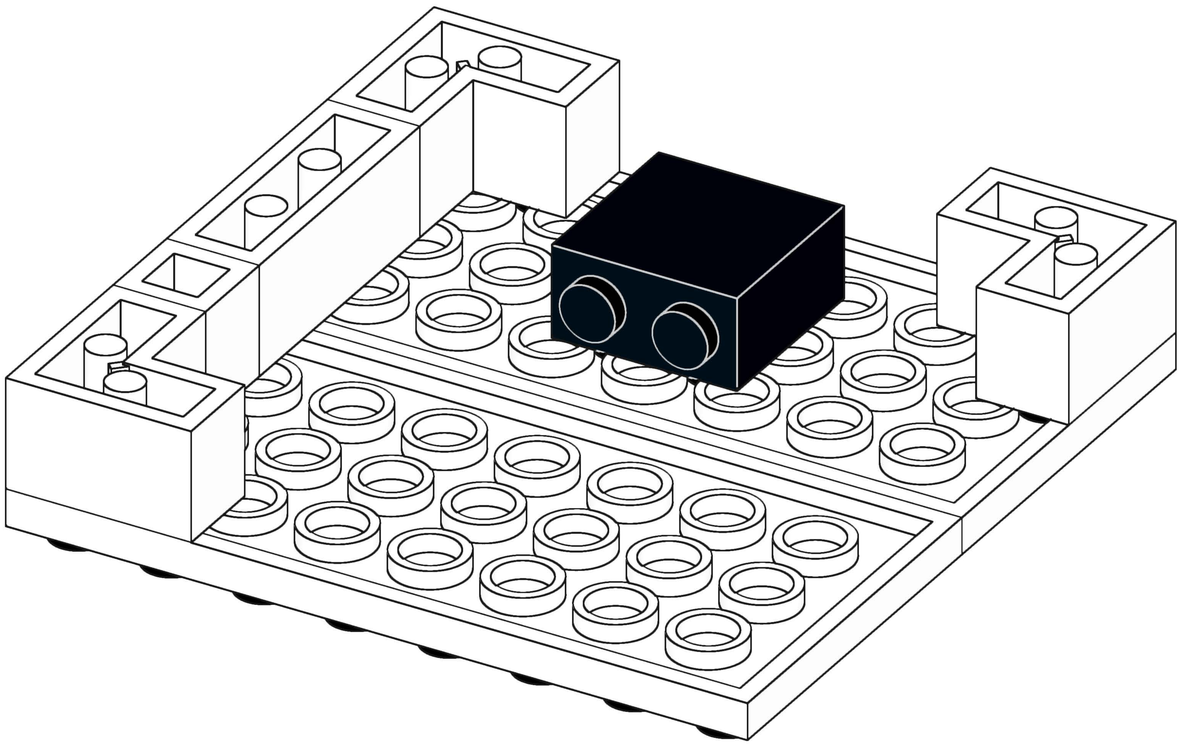

2

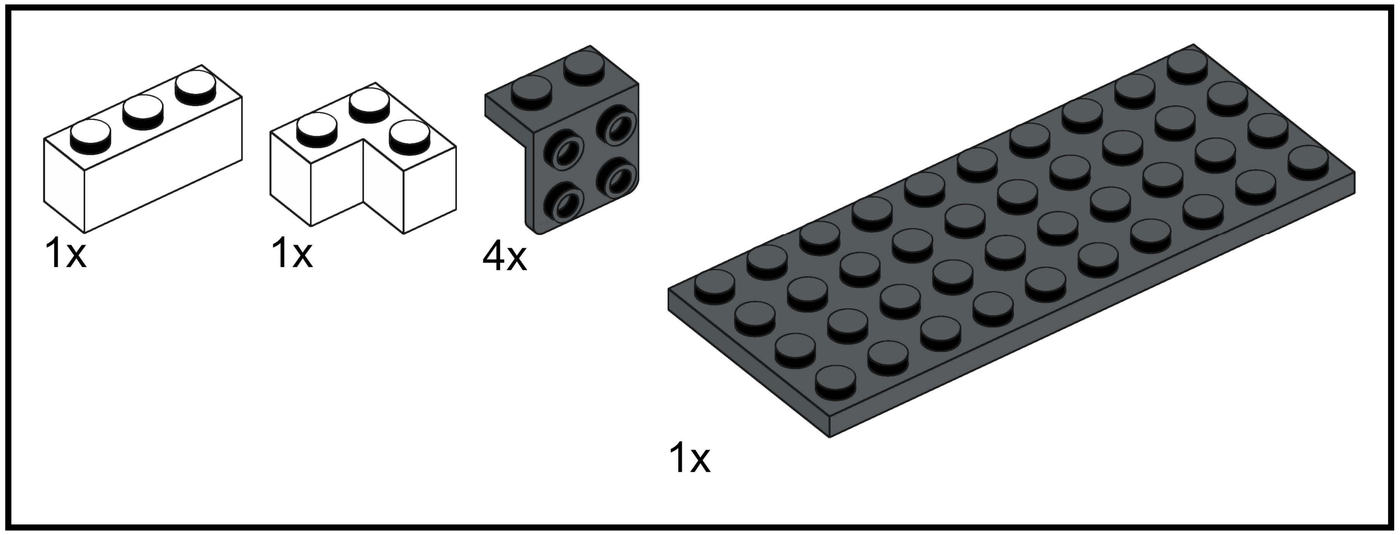

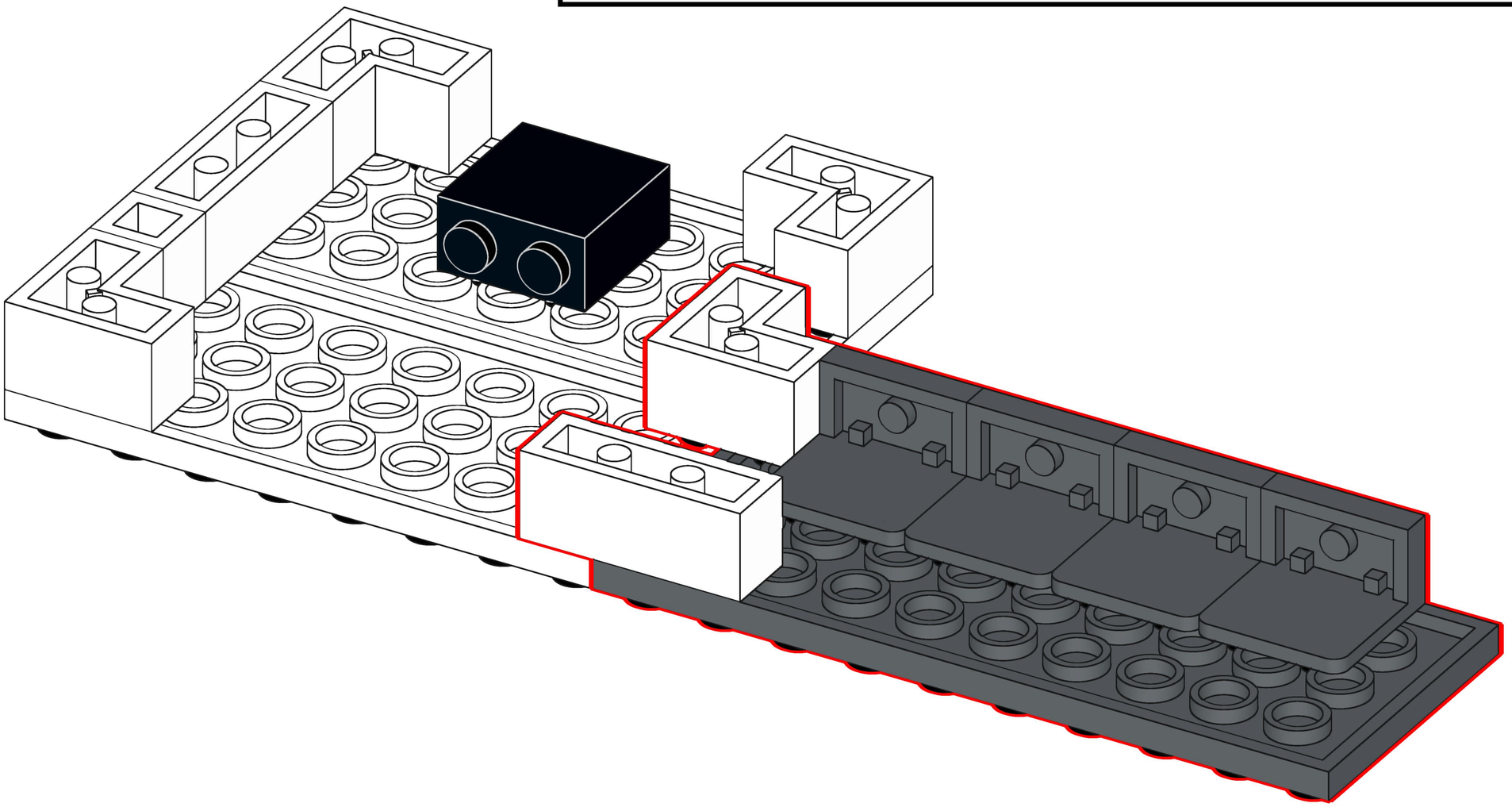

3

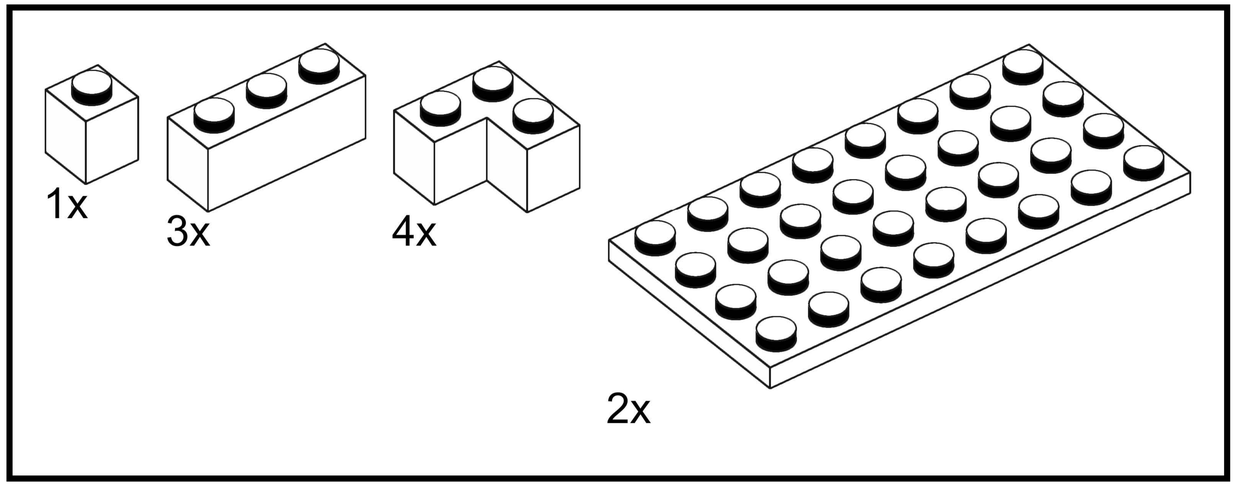

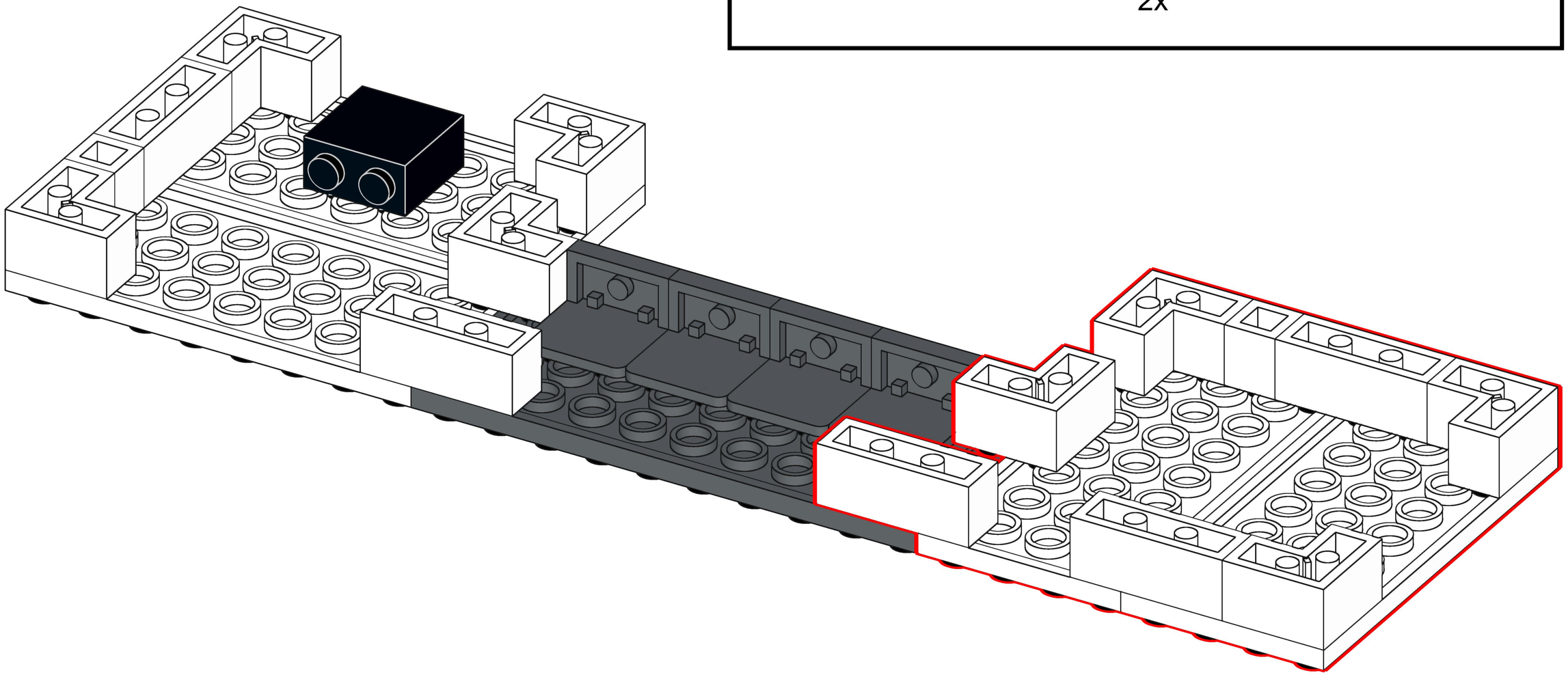

4

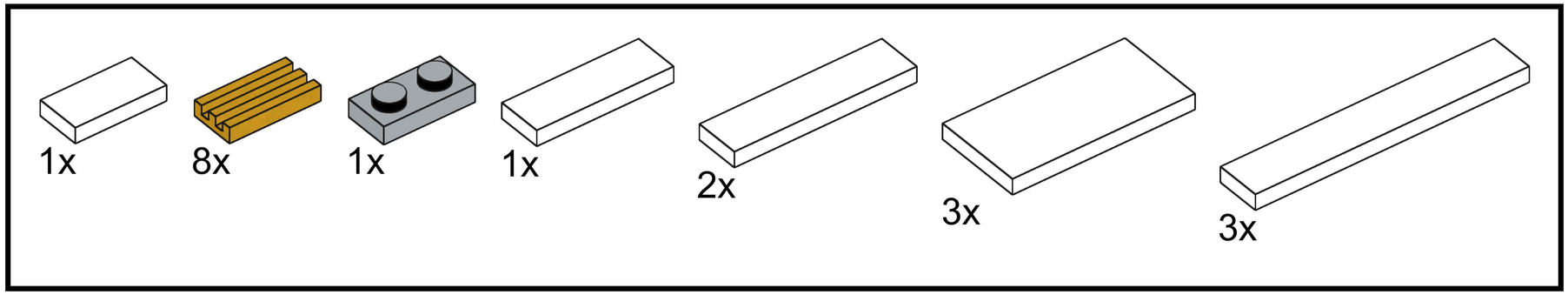

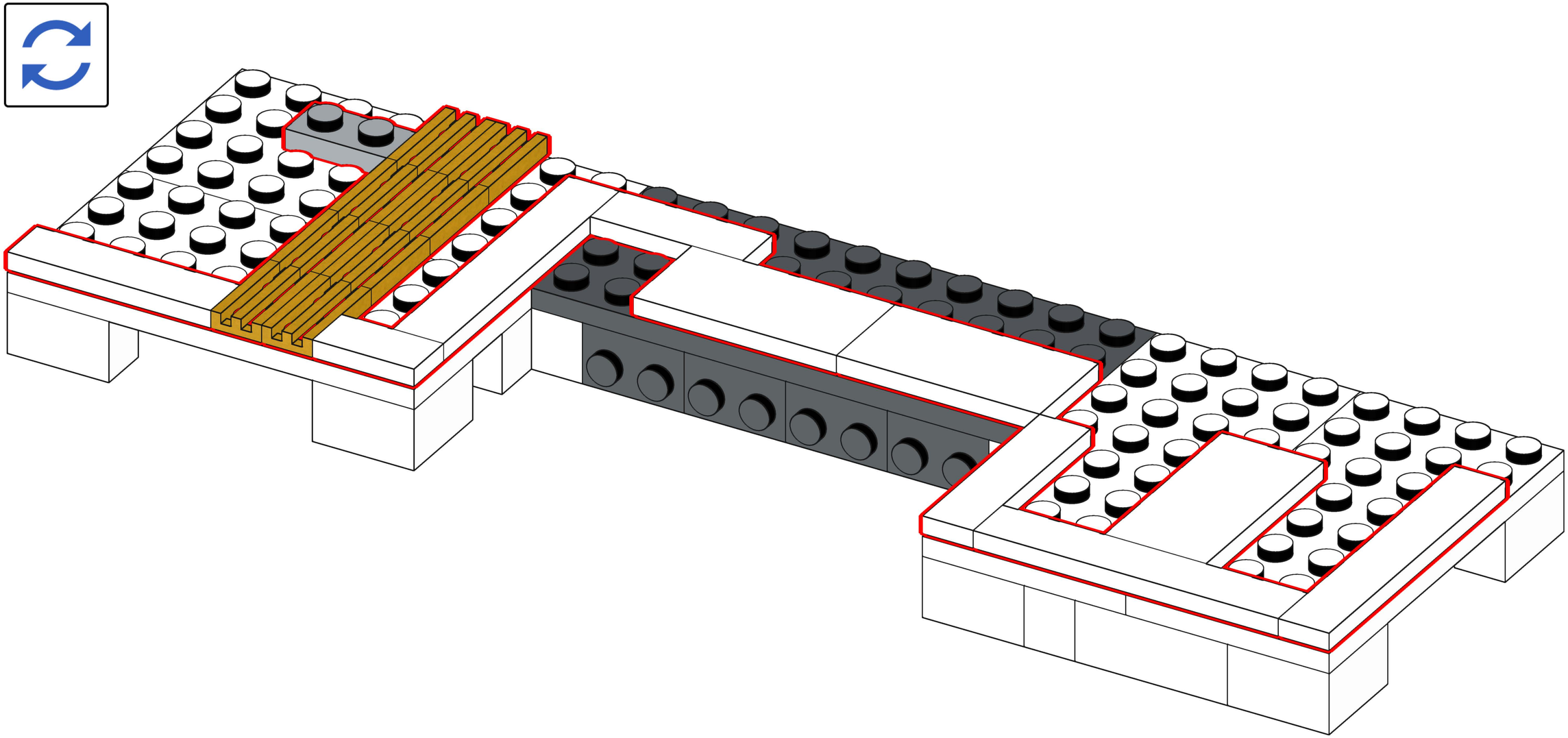

5

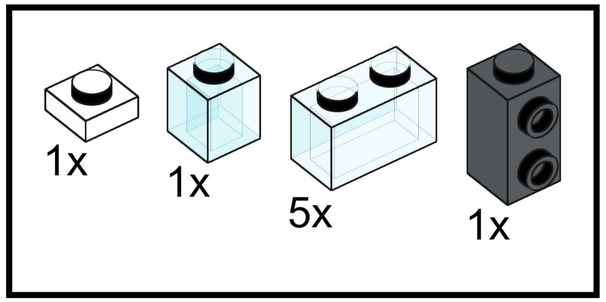

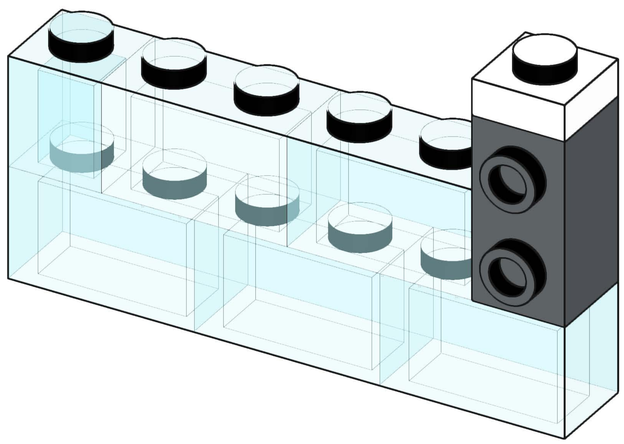

6

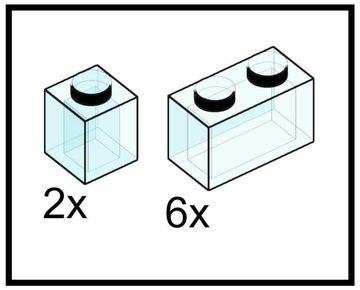

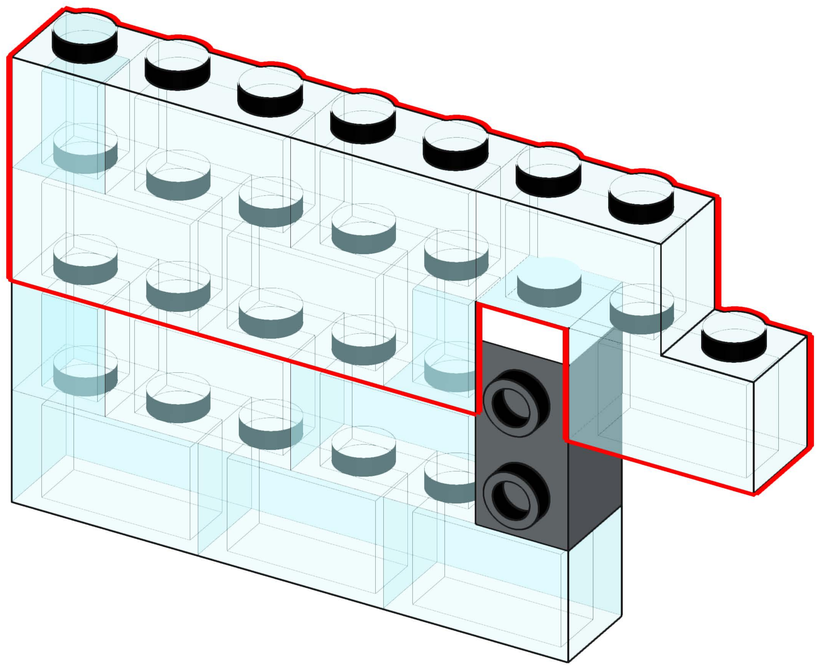

7

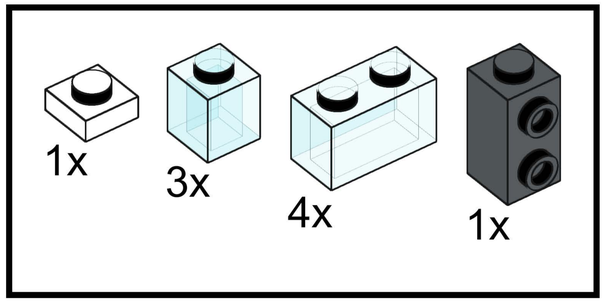

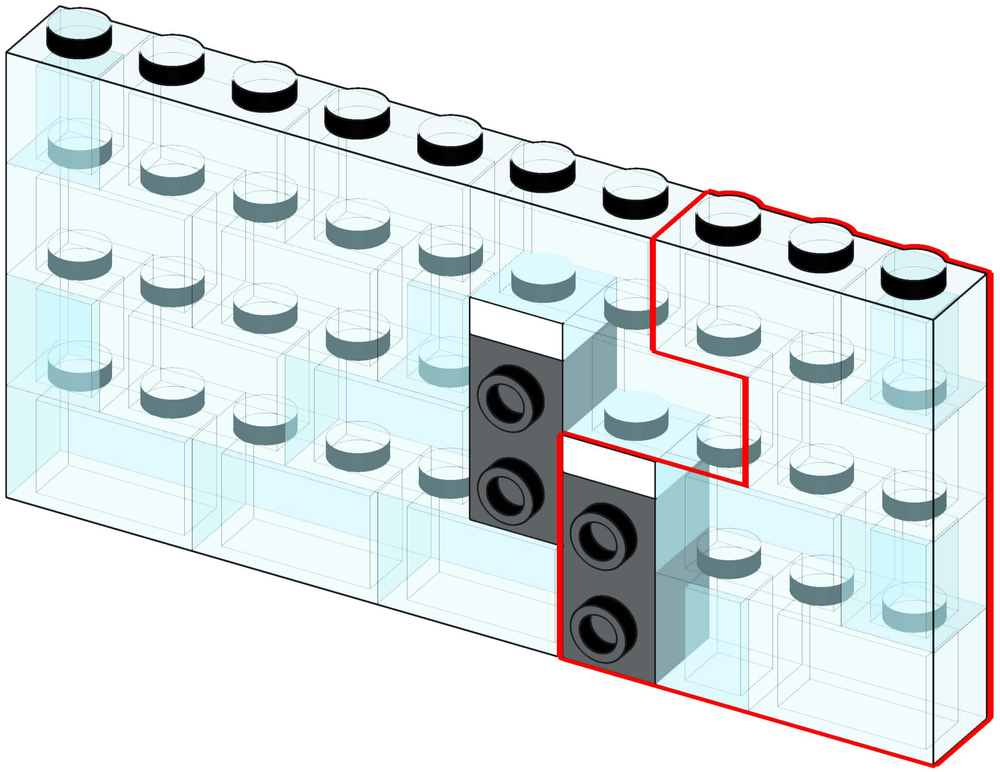

8

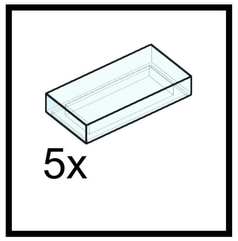

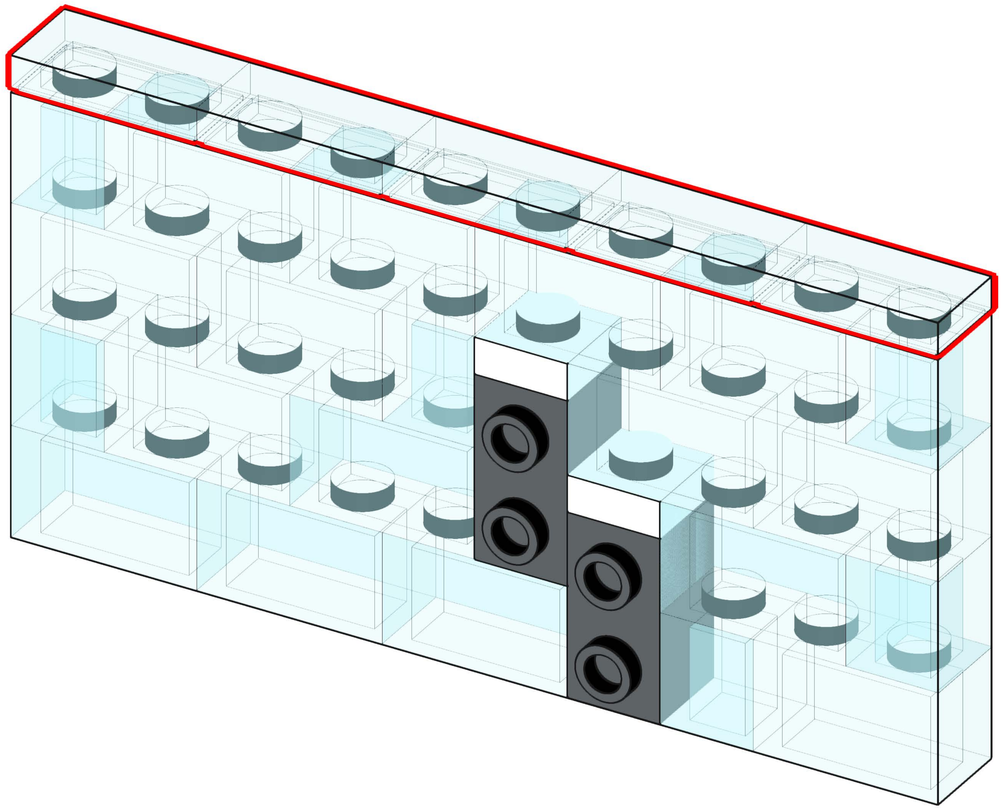

9

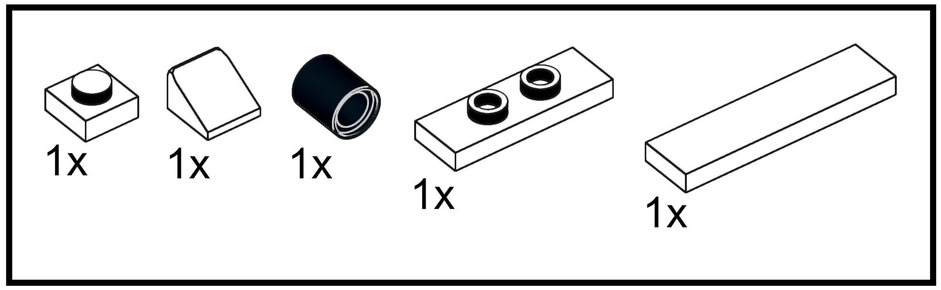

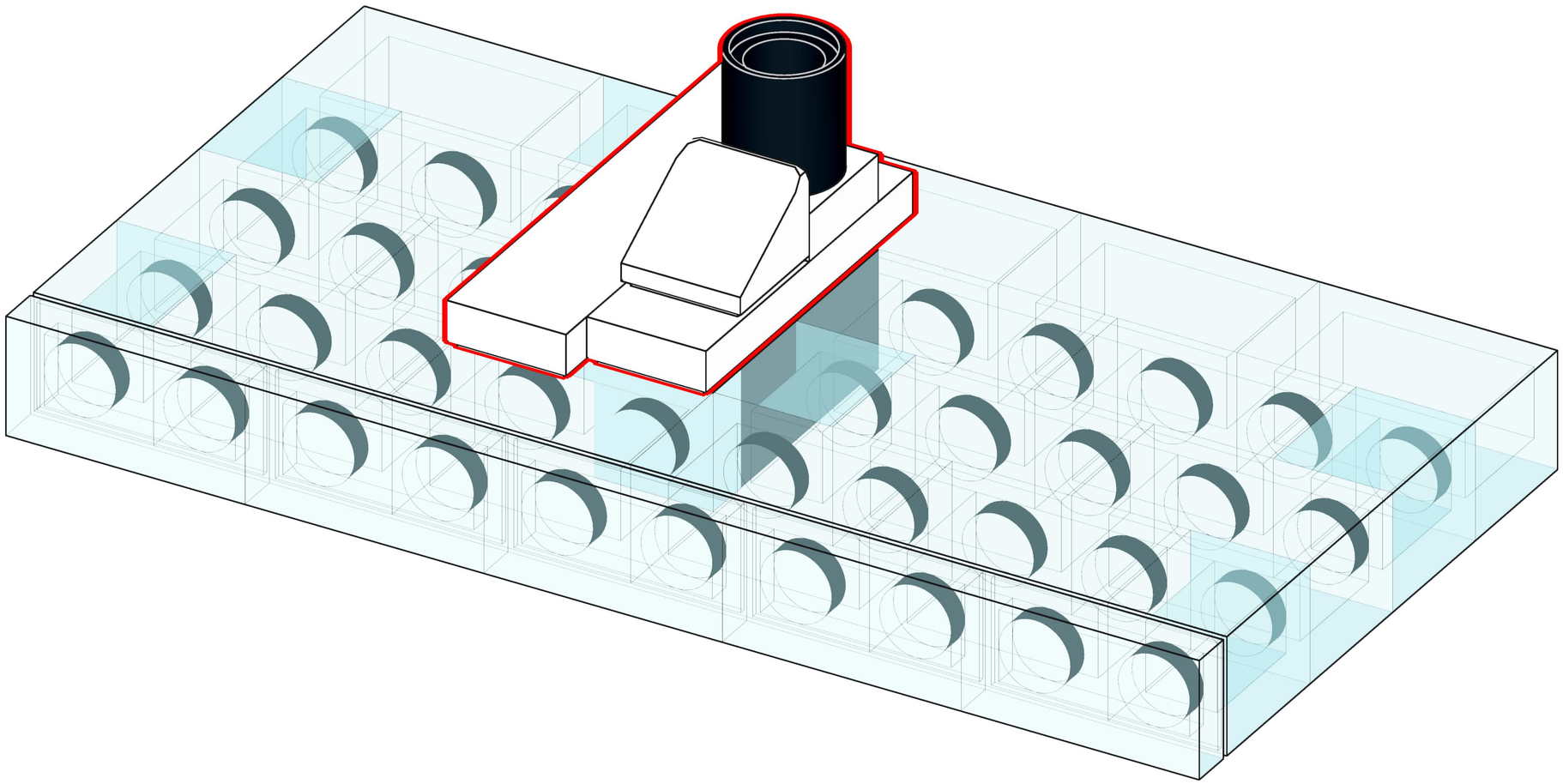

10

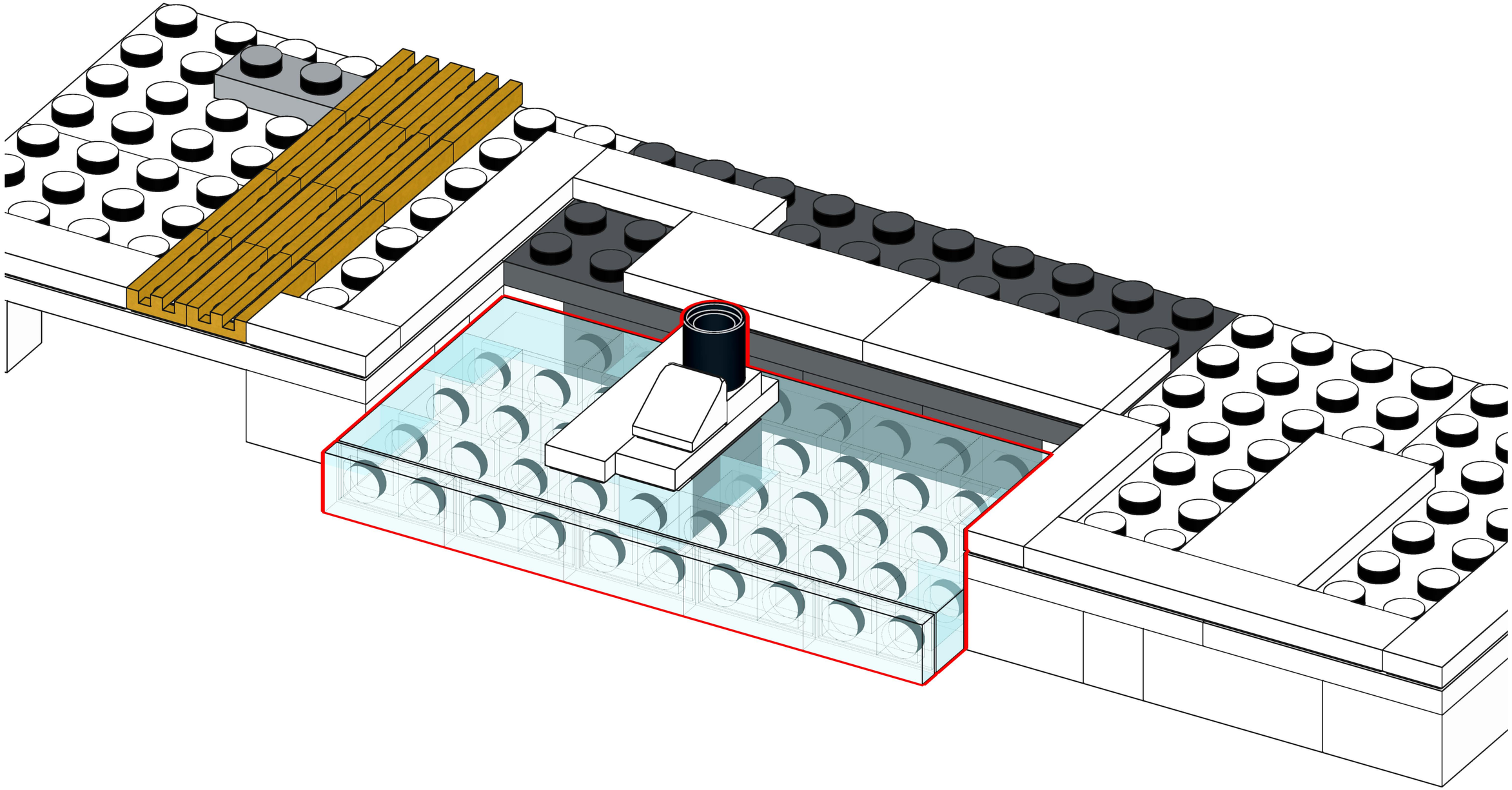

11

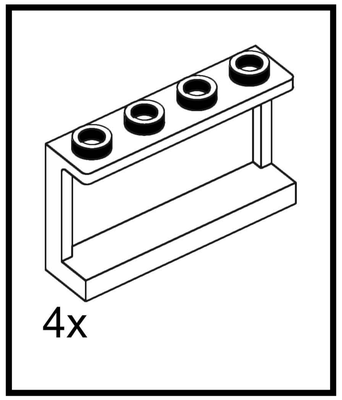

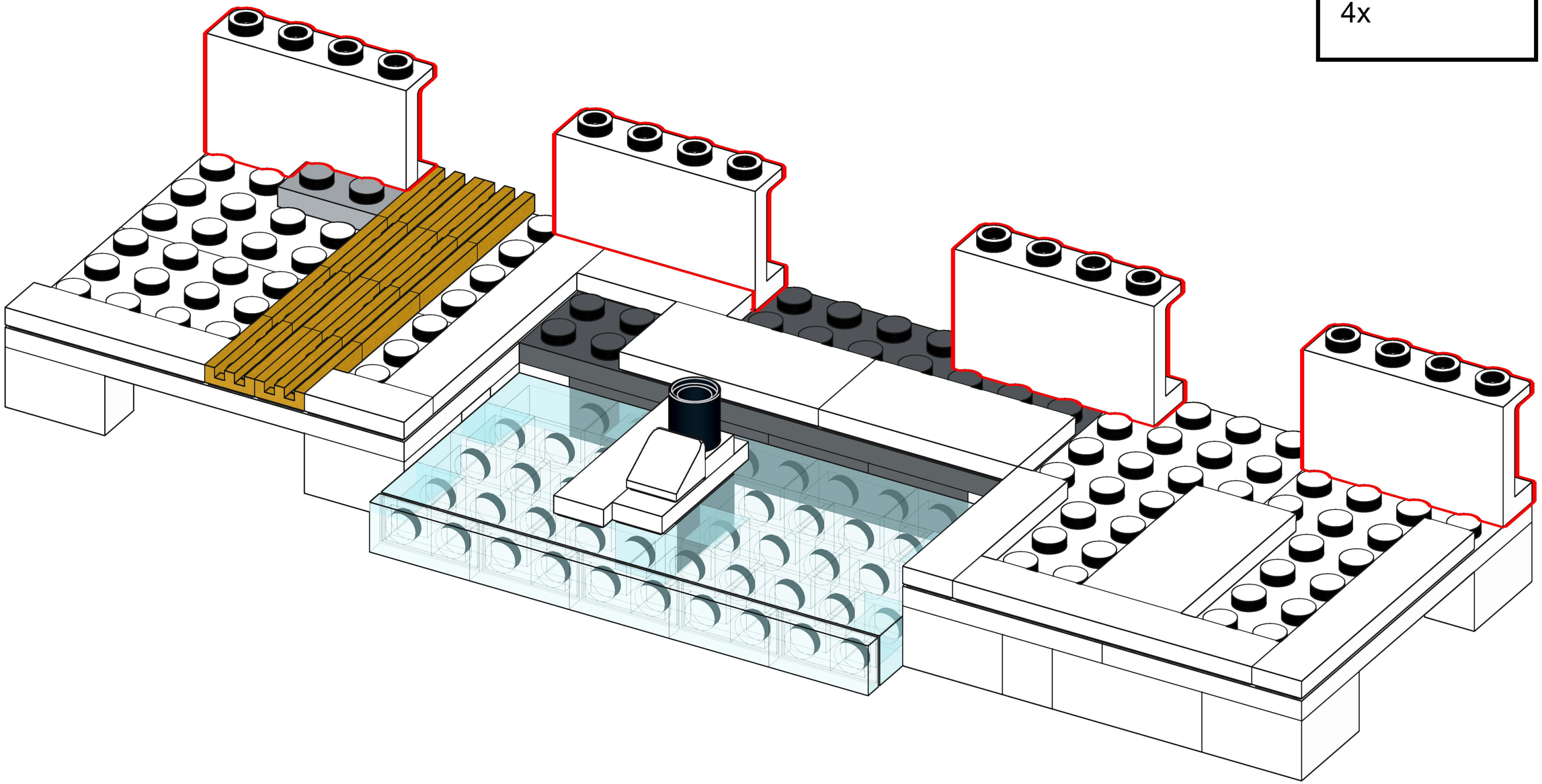

12

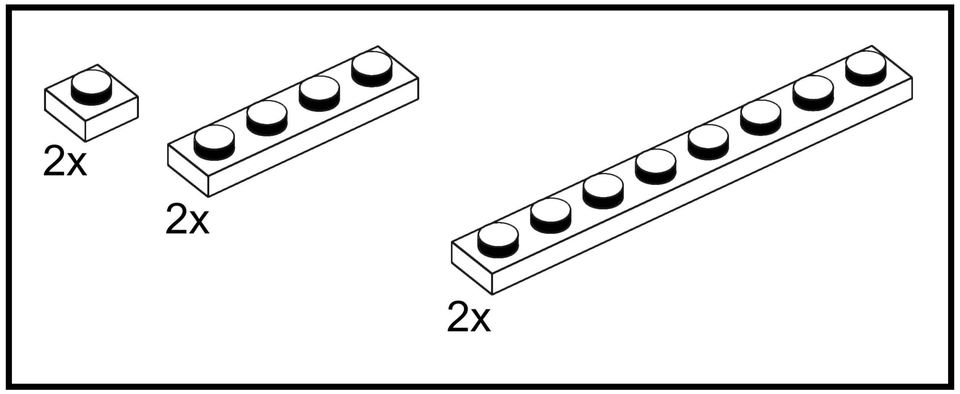

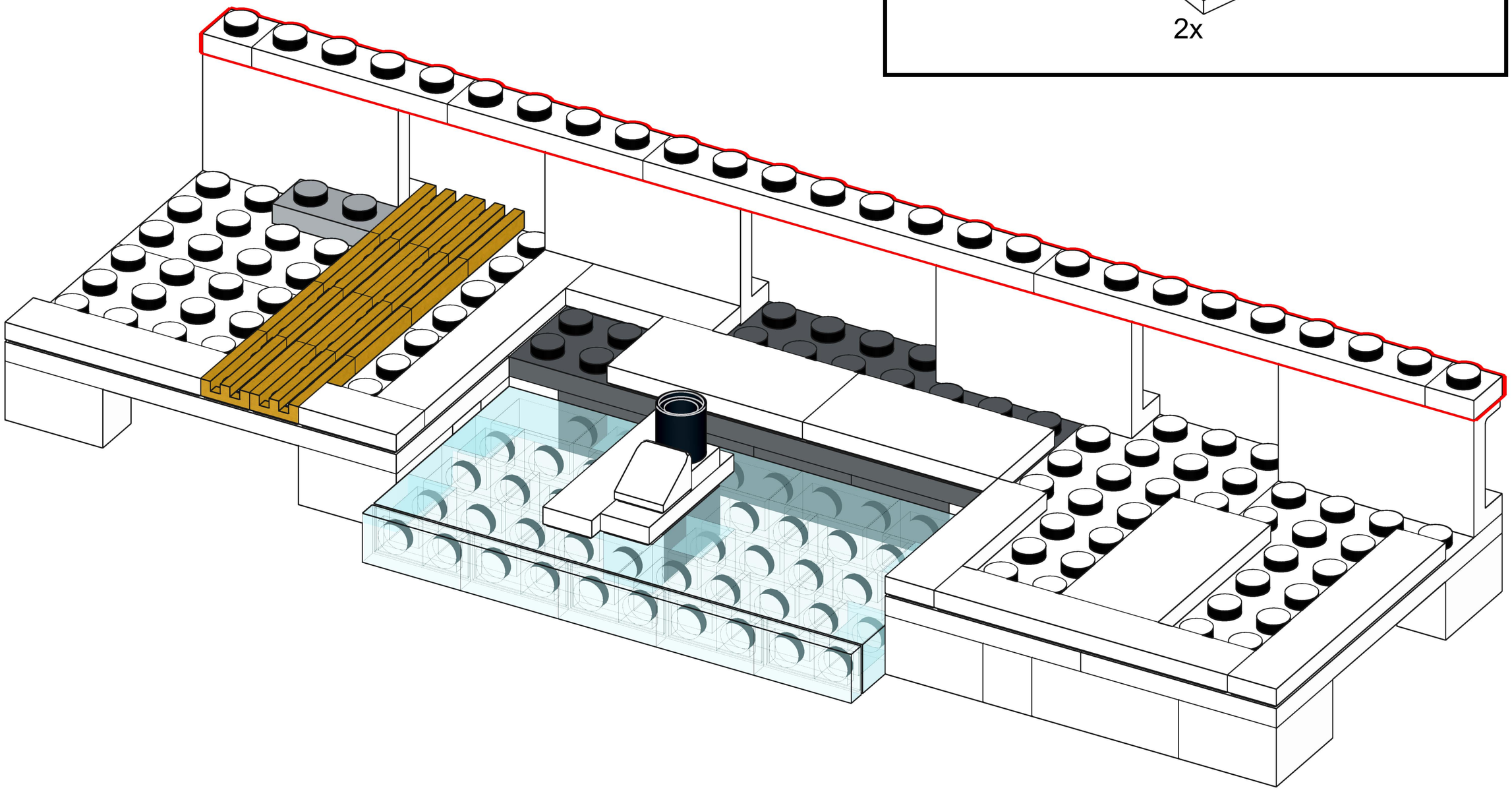

13

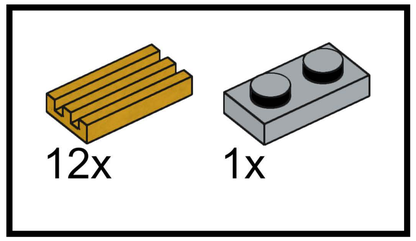

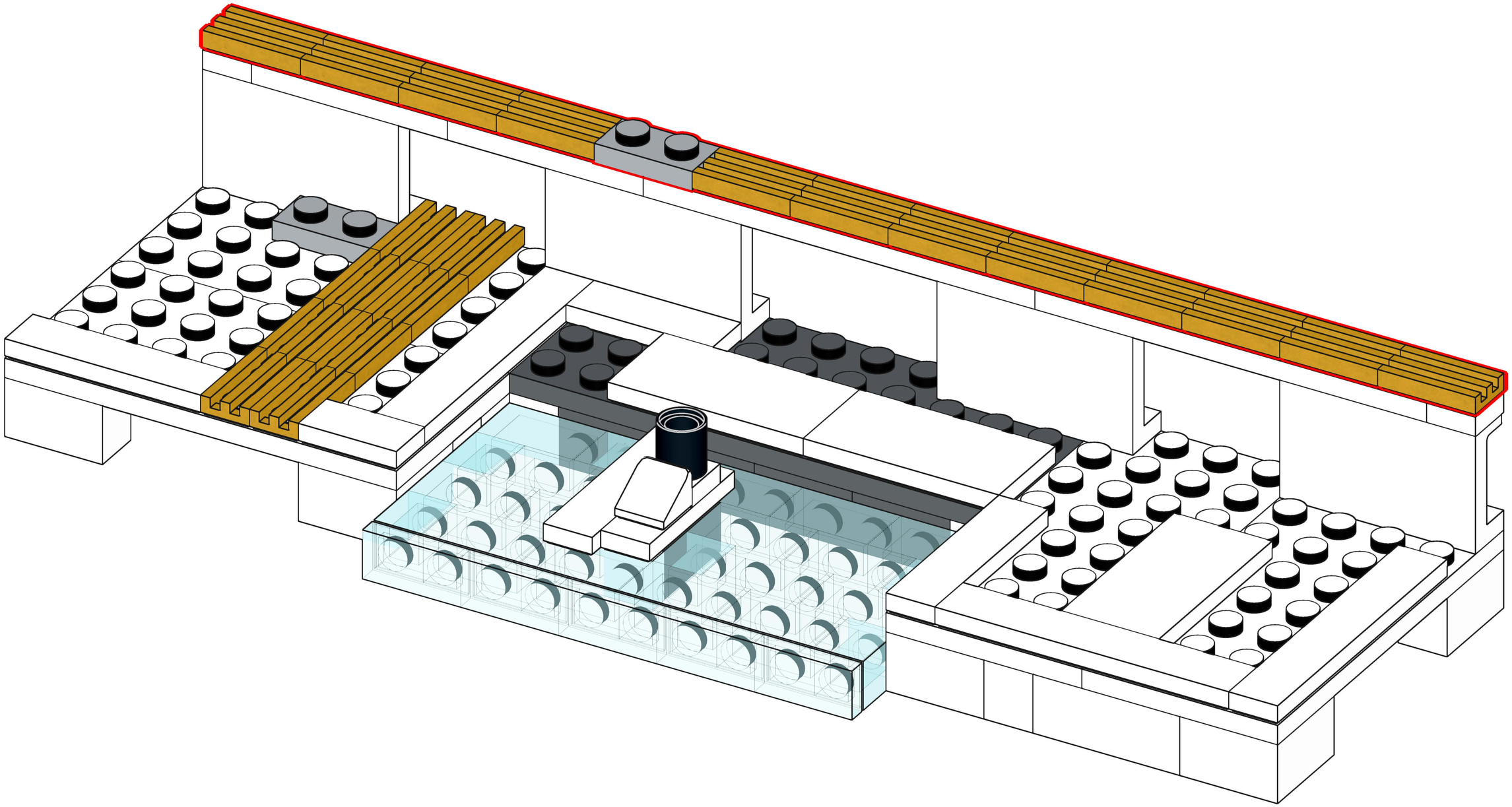

14

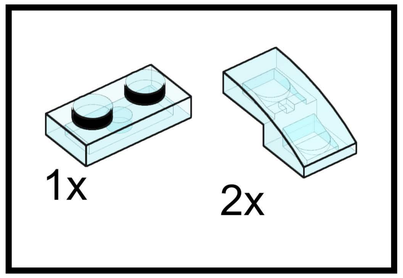

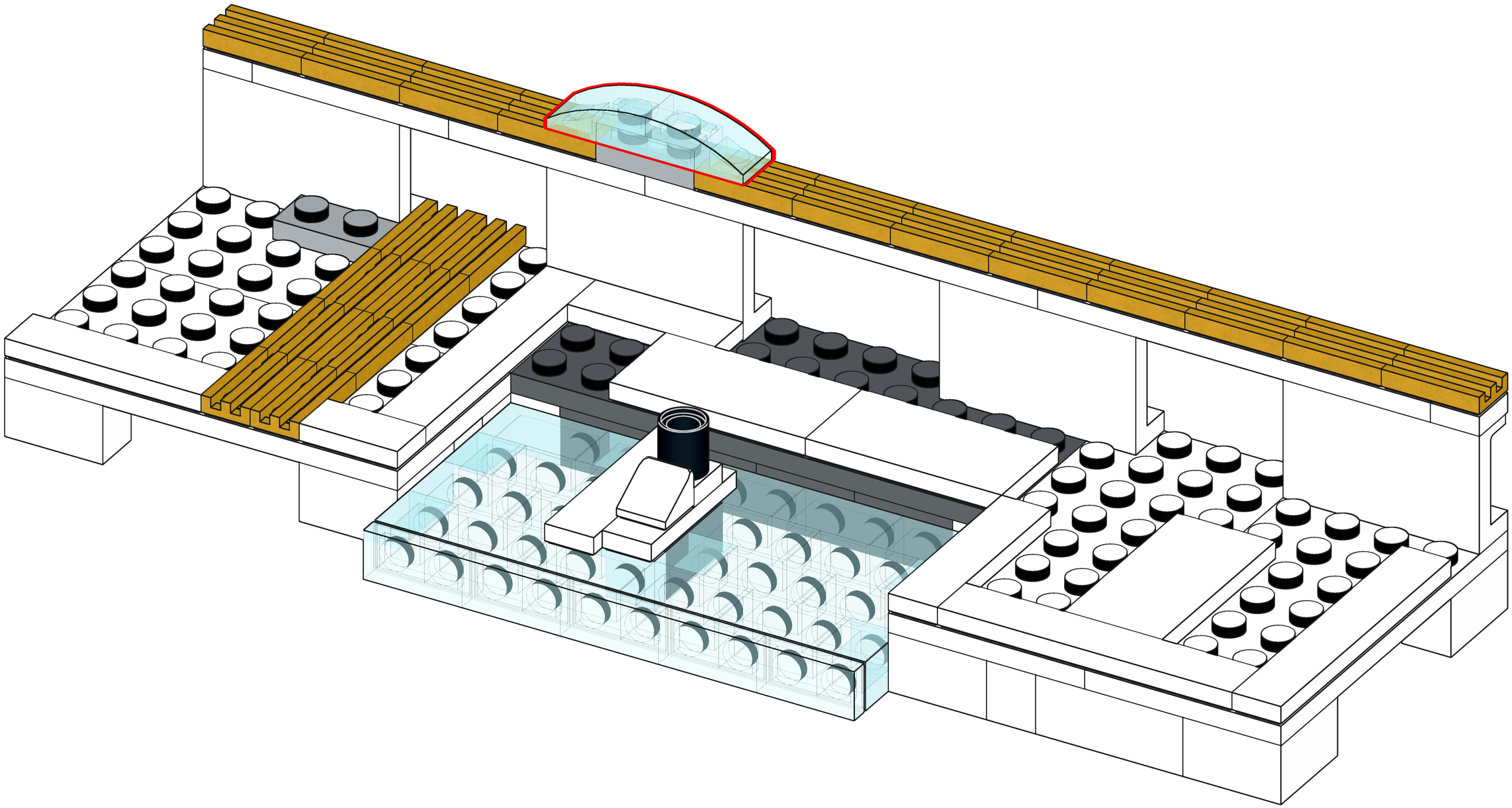

15

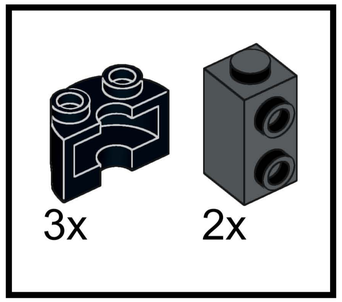

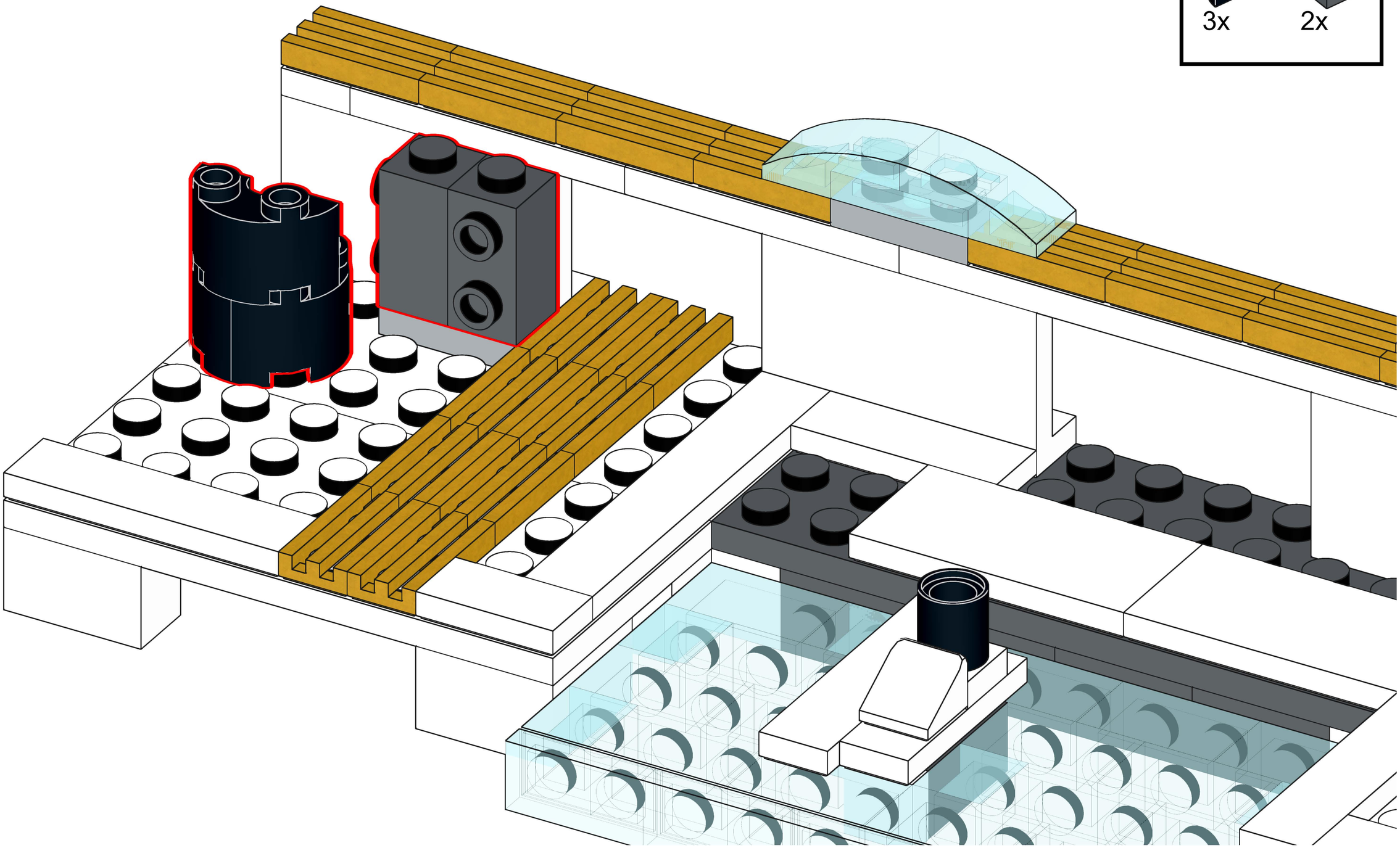

16

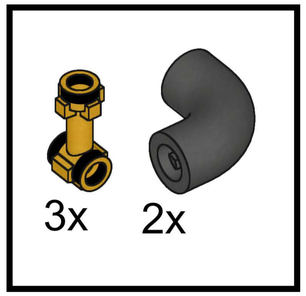

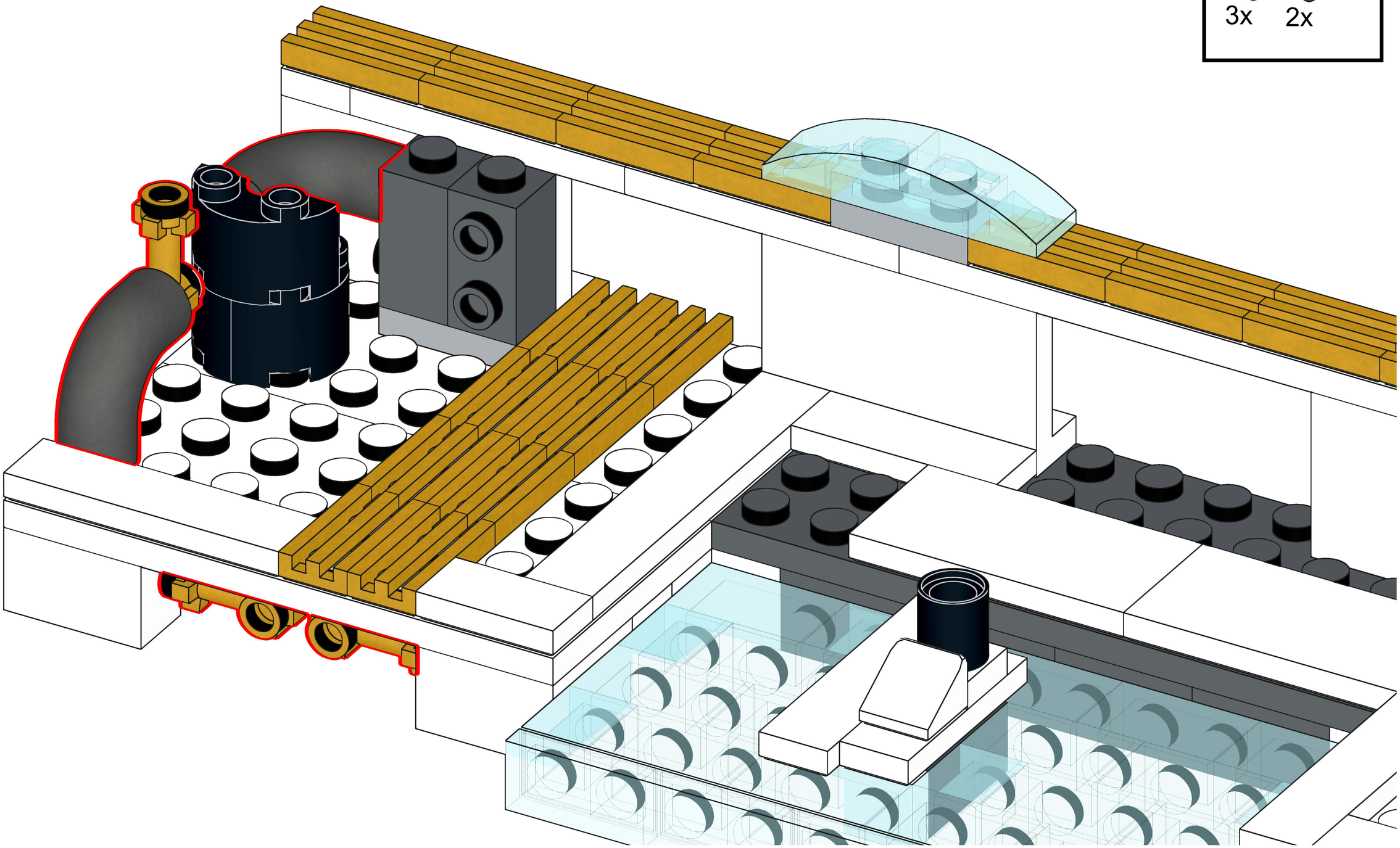

17

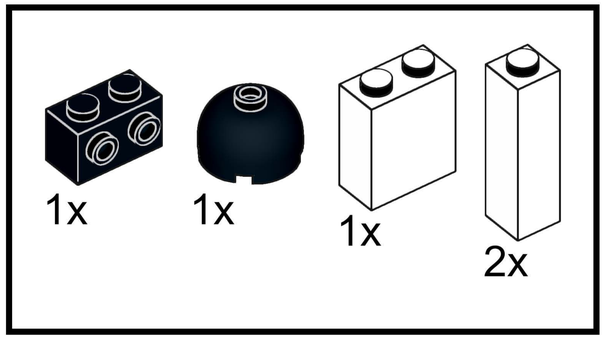

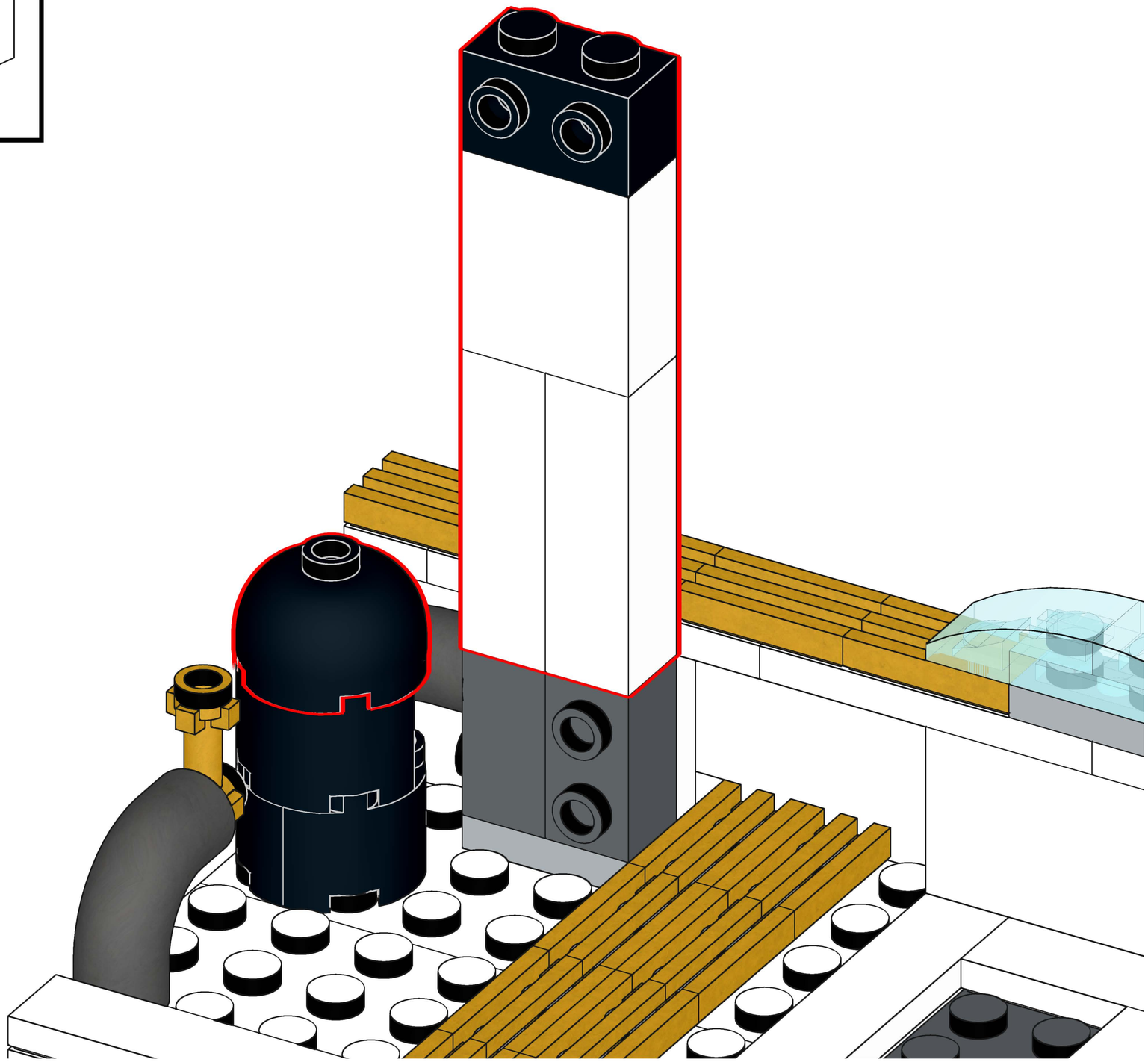

18

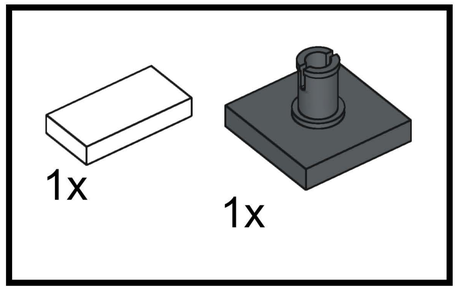

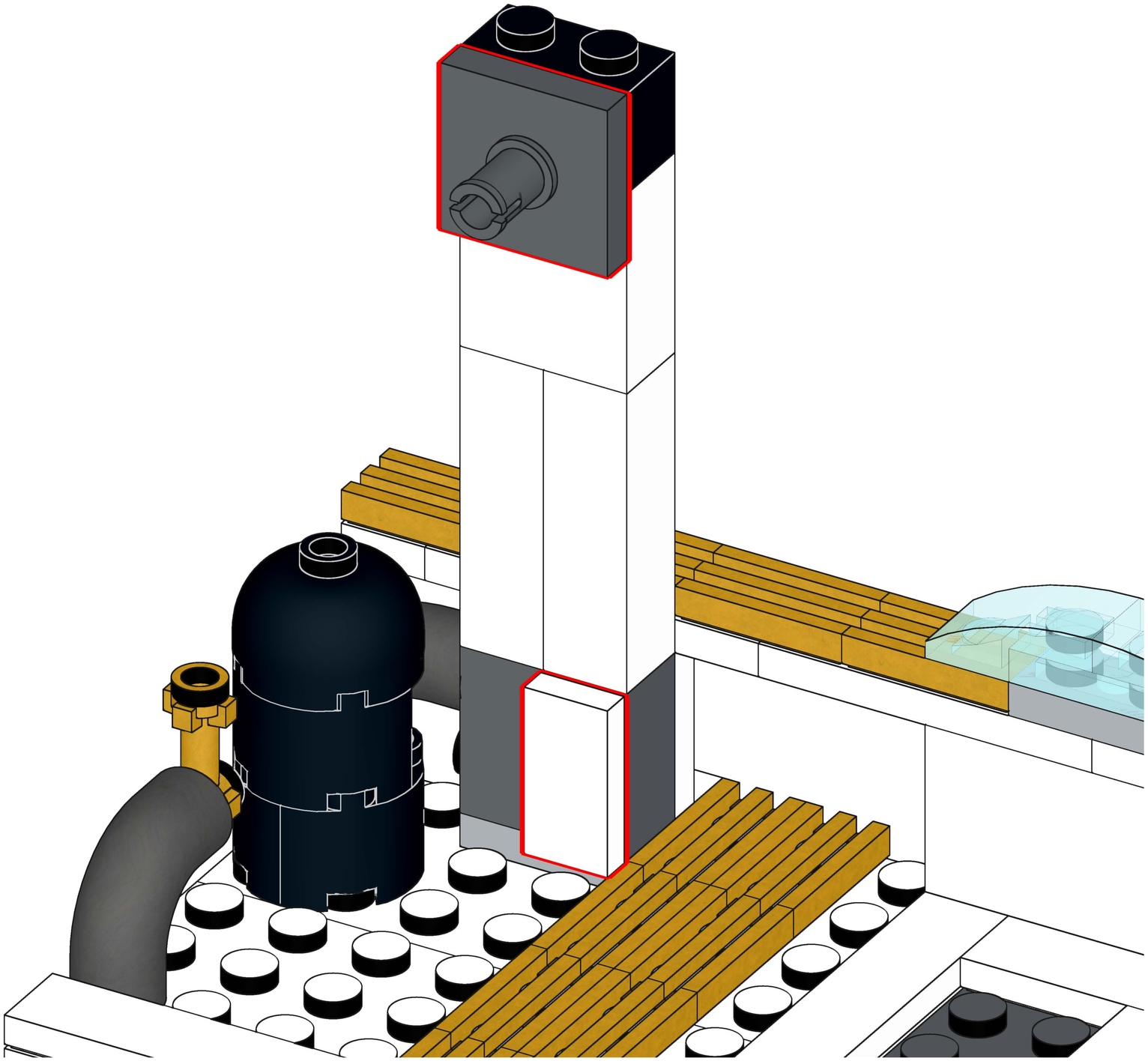

19

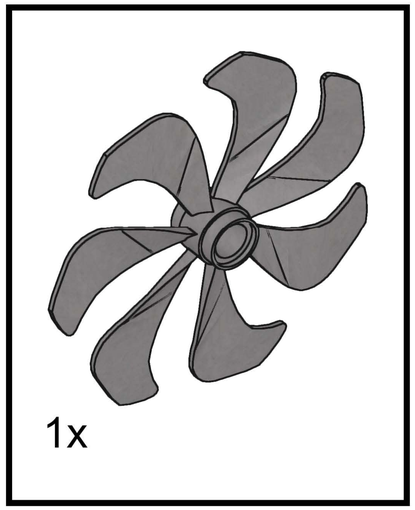

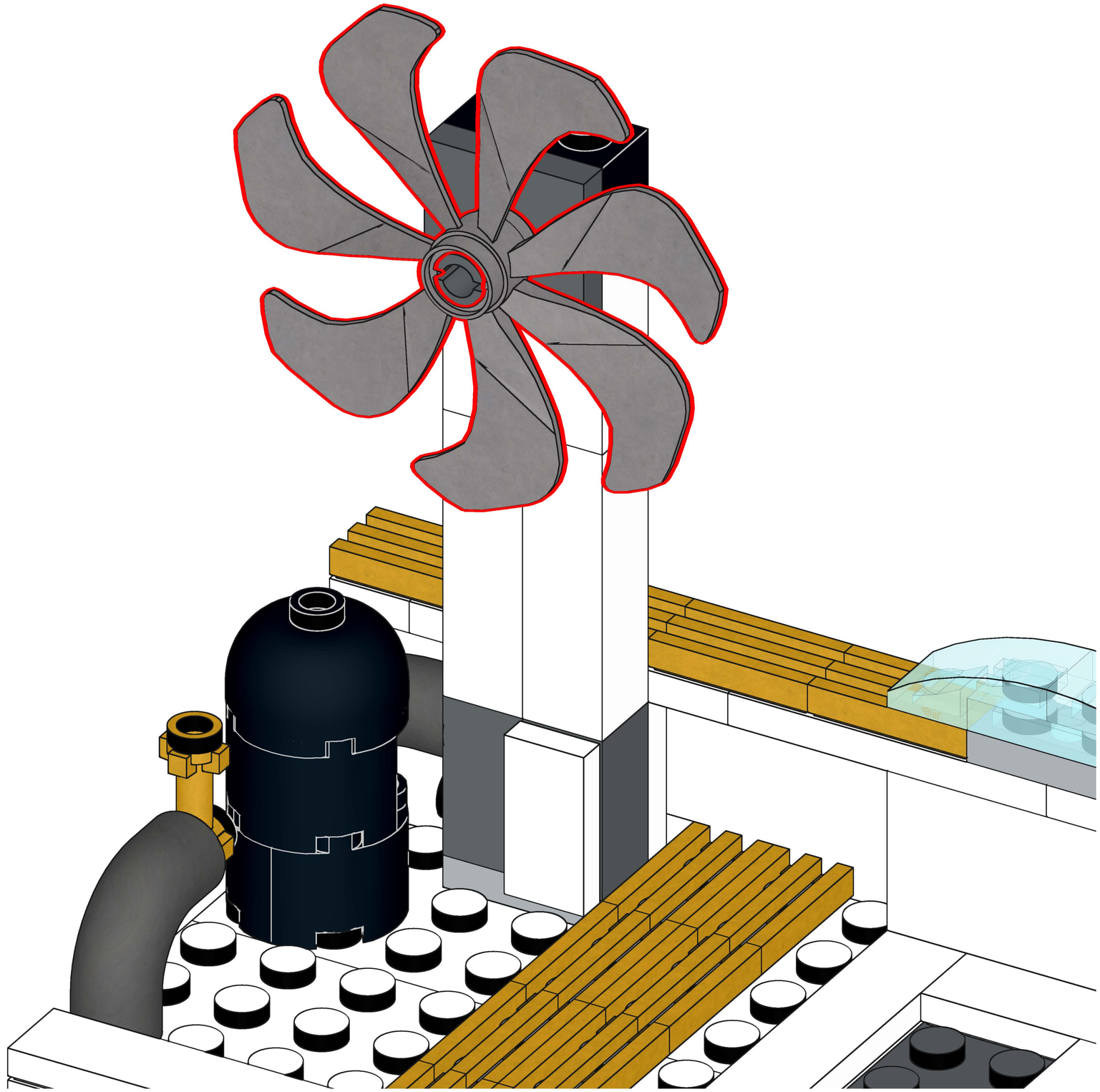

20

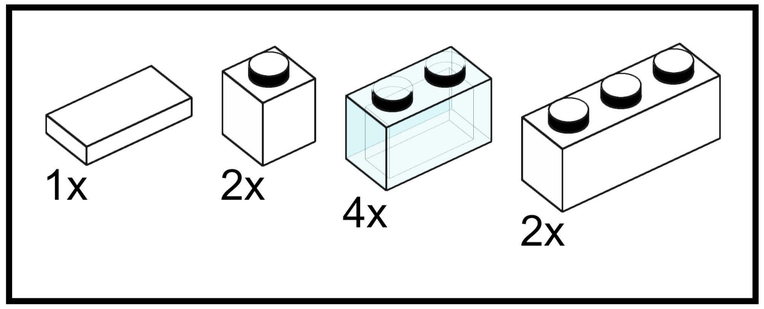

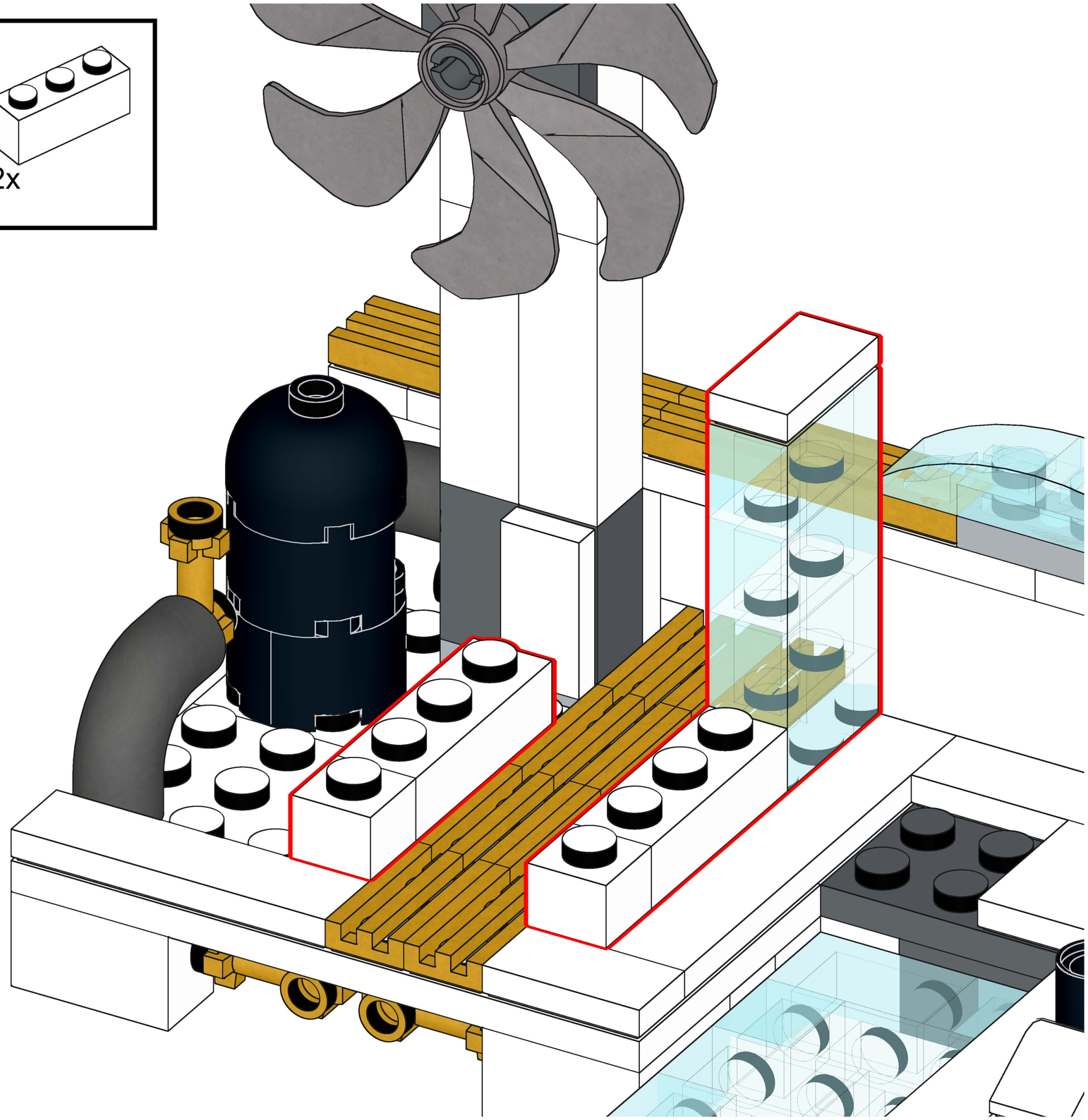

21

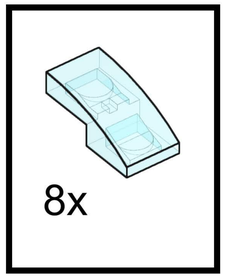

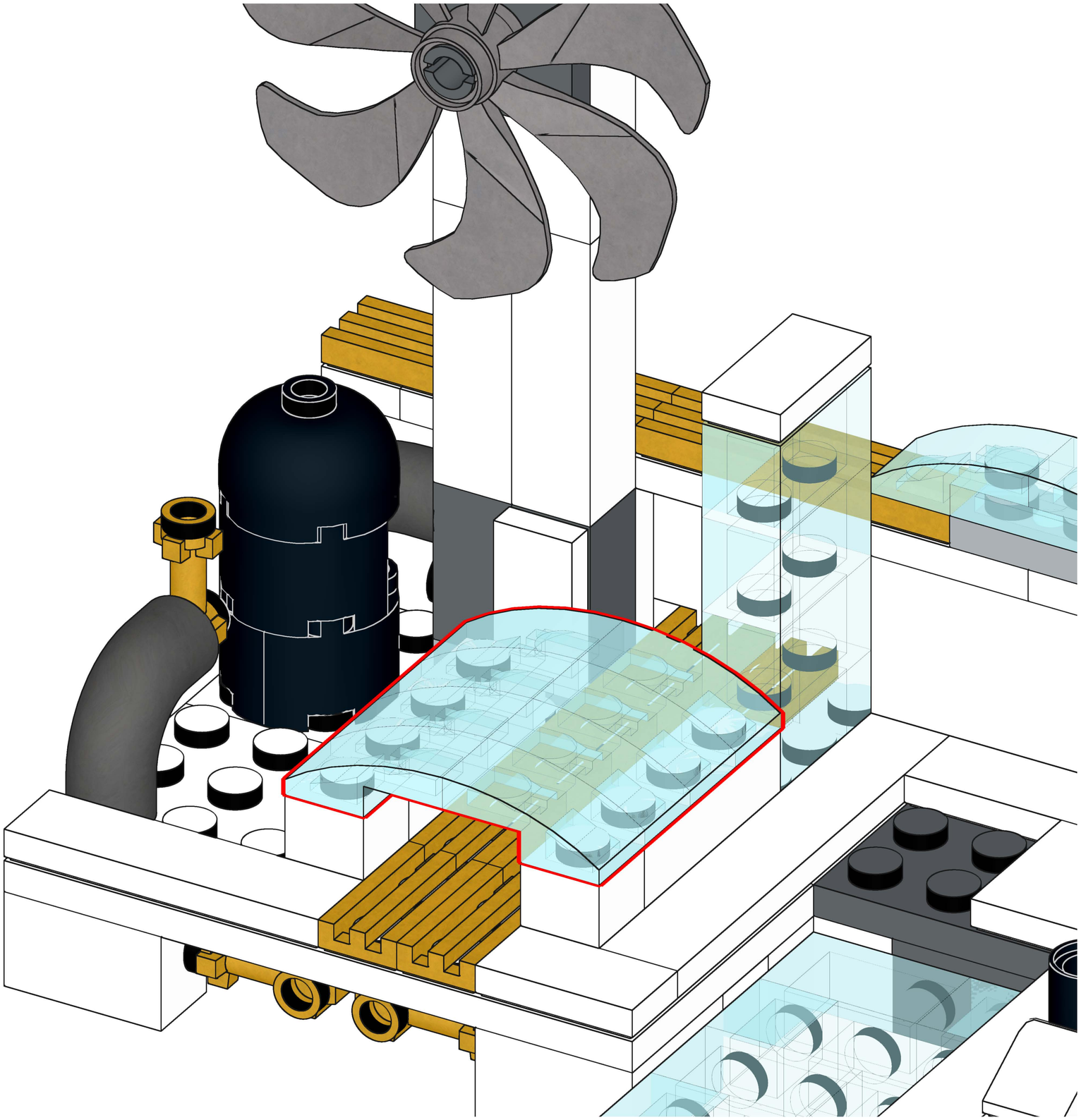

22

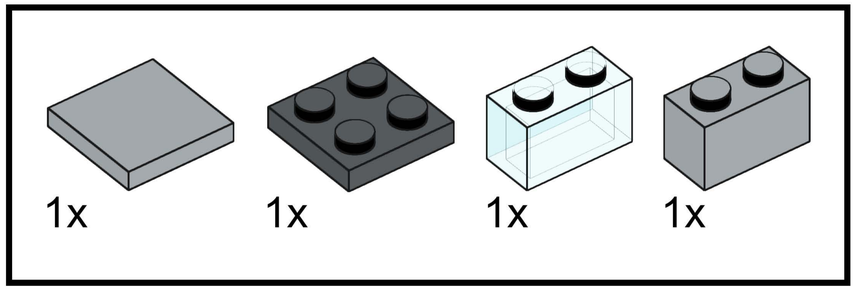

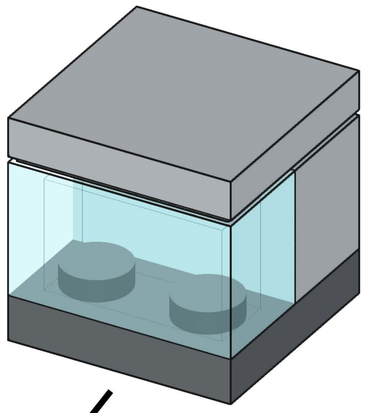

23

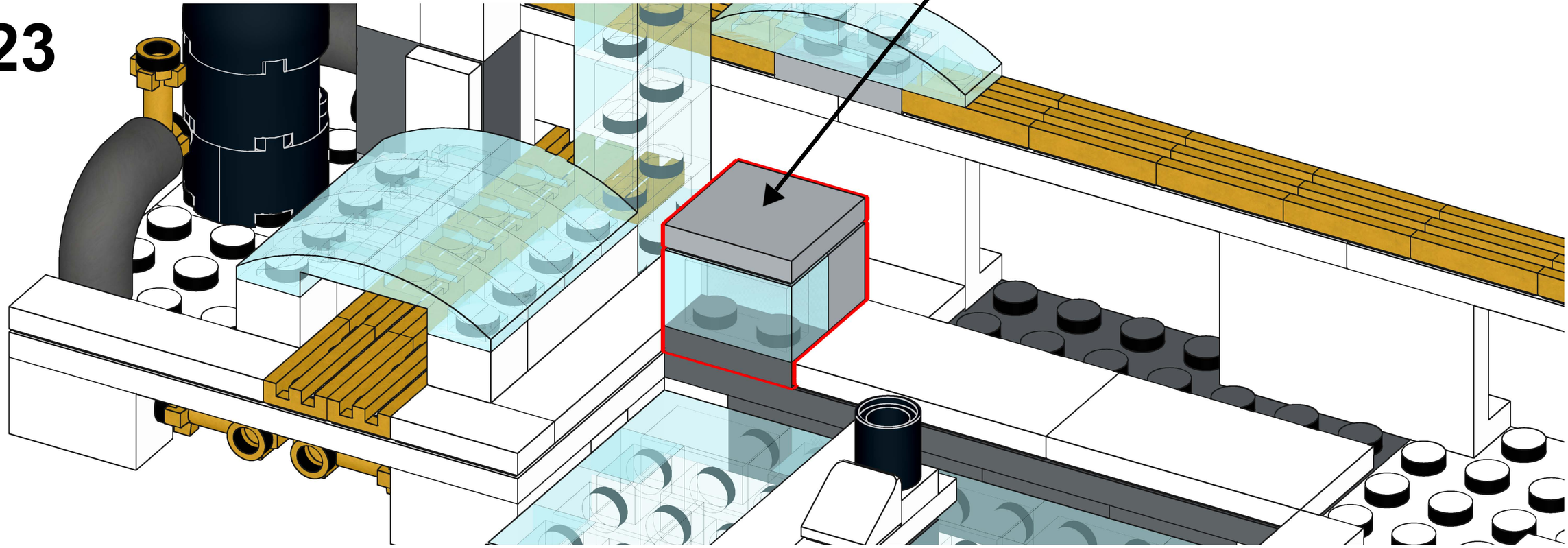

24

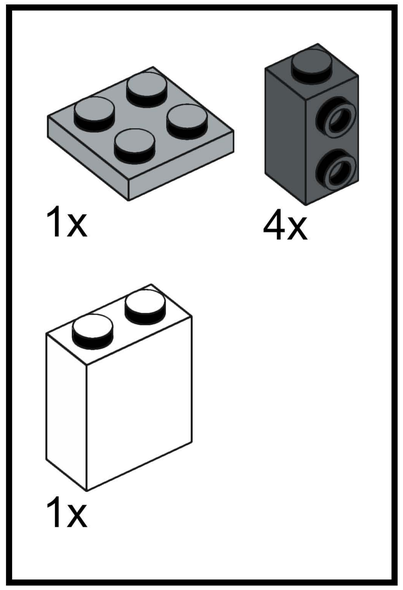

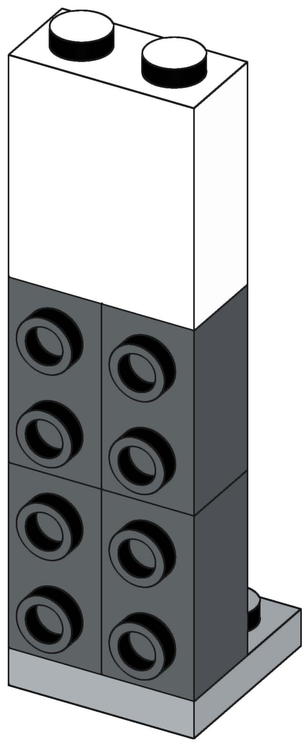

25

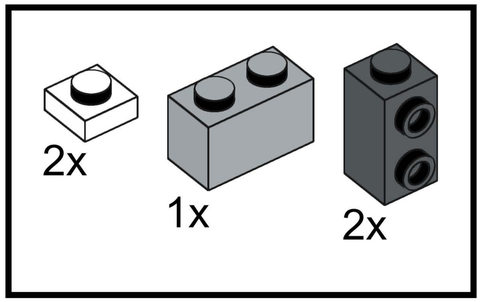

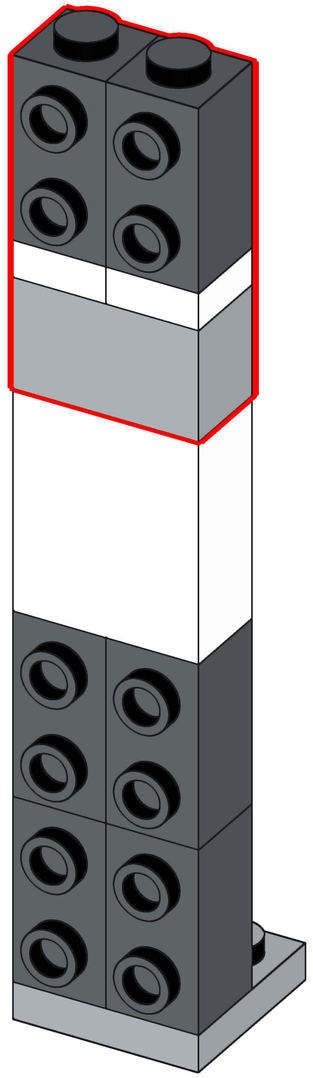

26

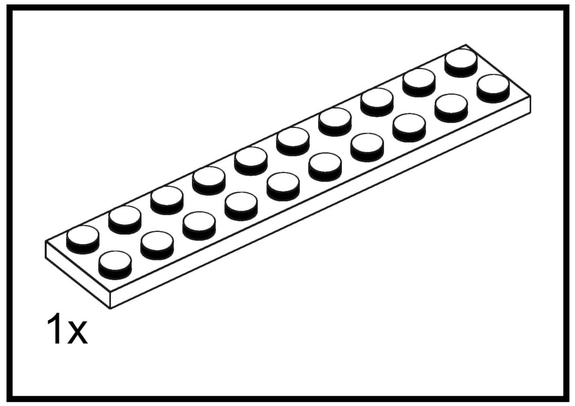

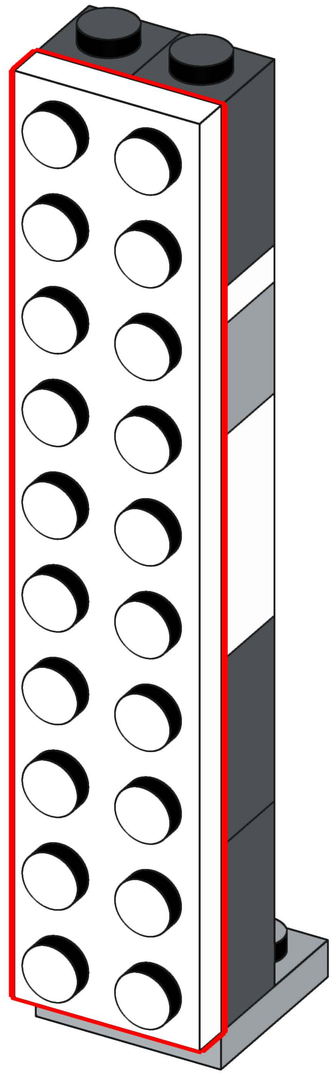

27

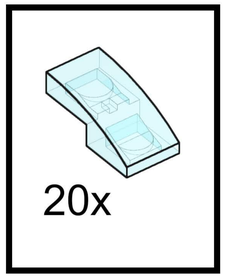

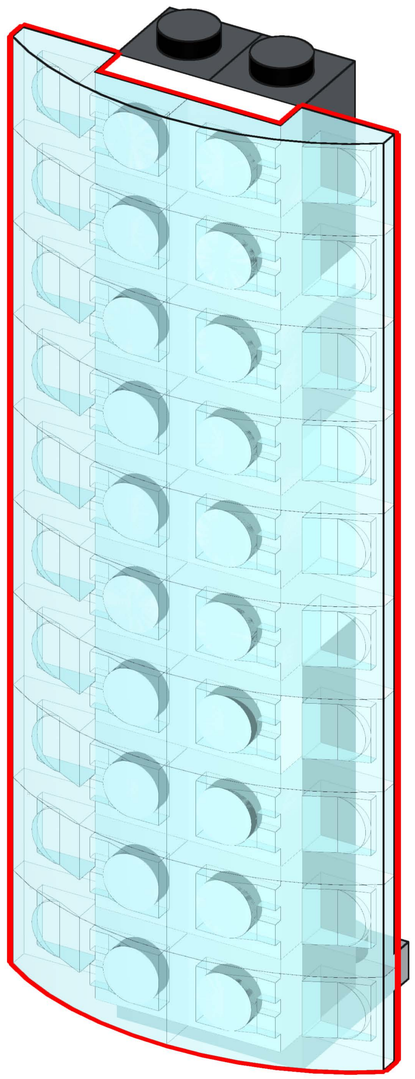

28

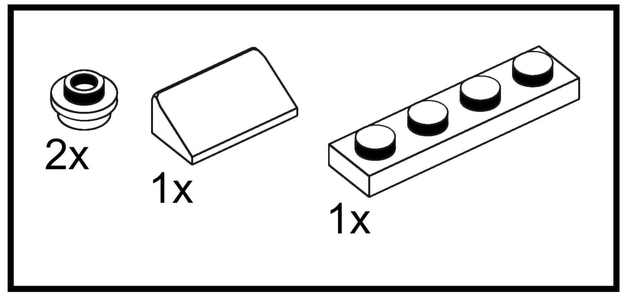

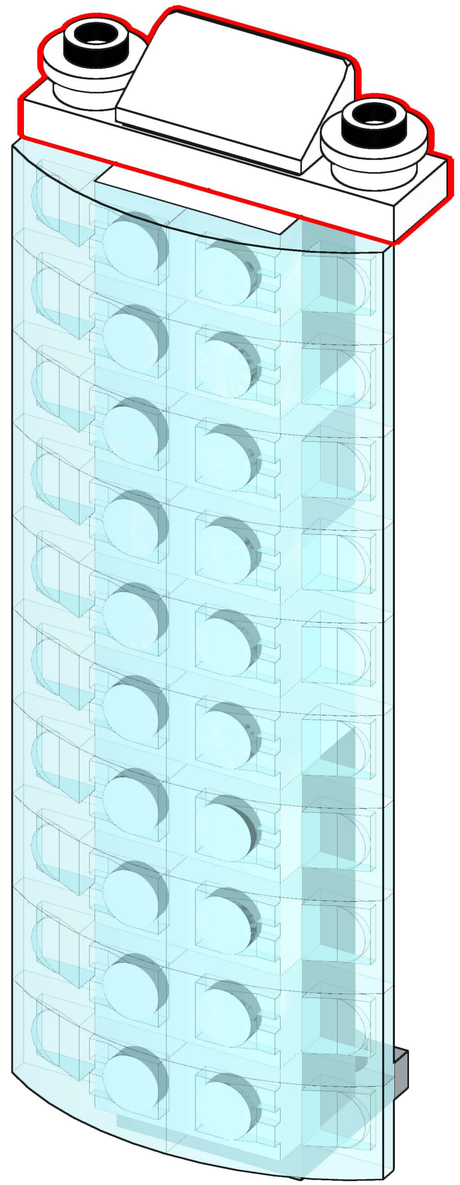

29

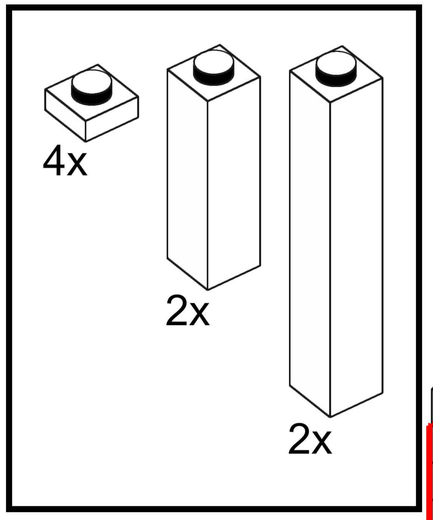

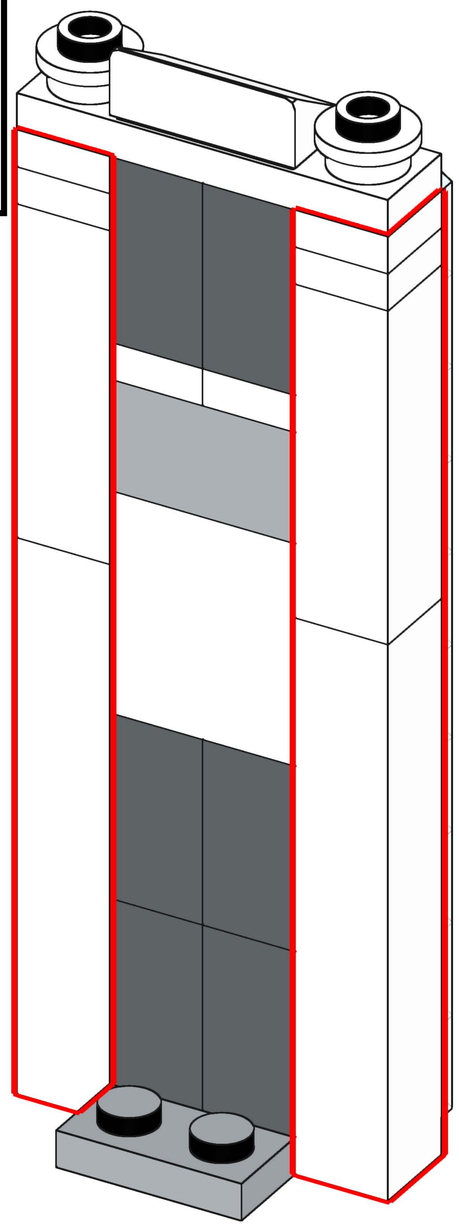

30

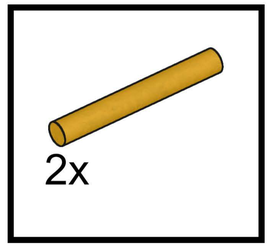

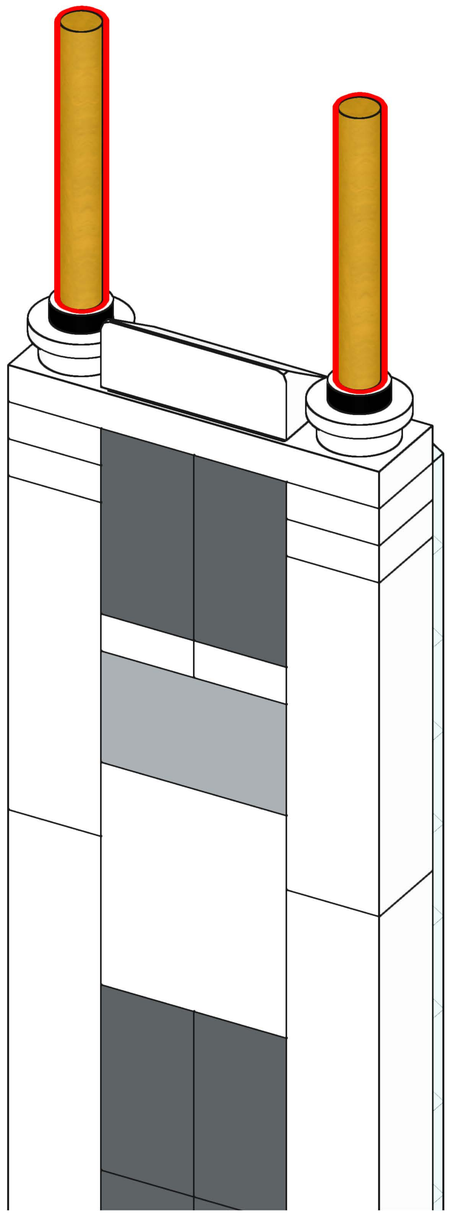

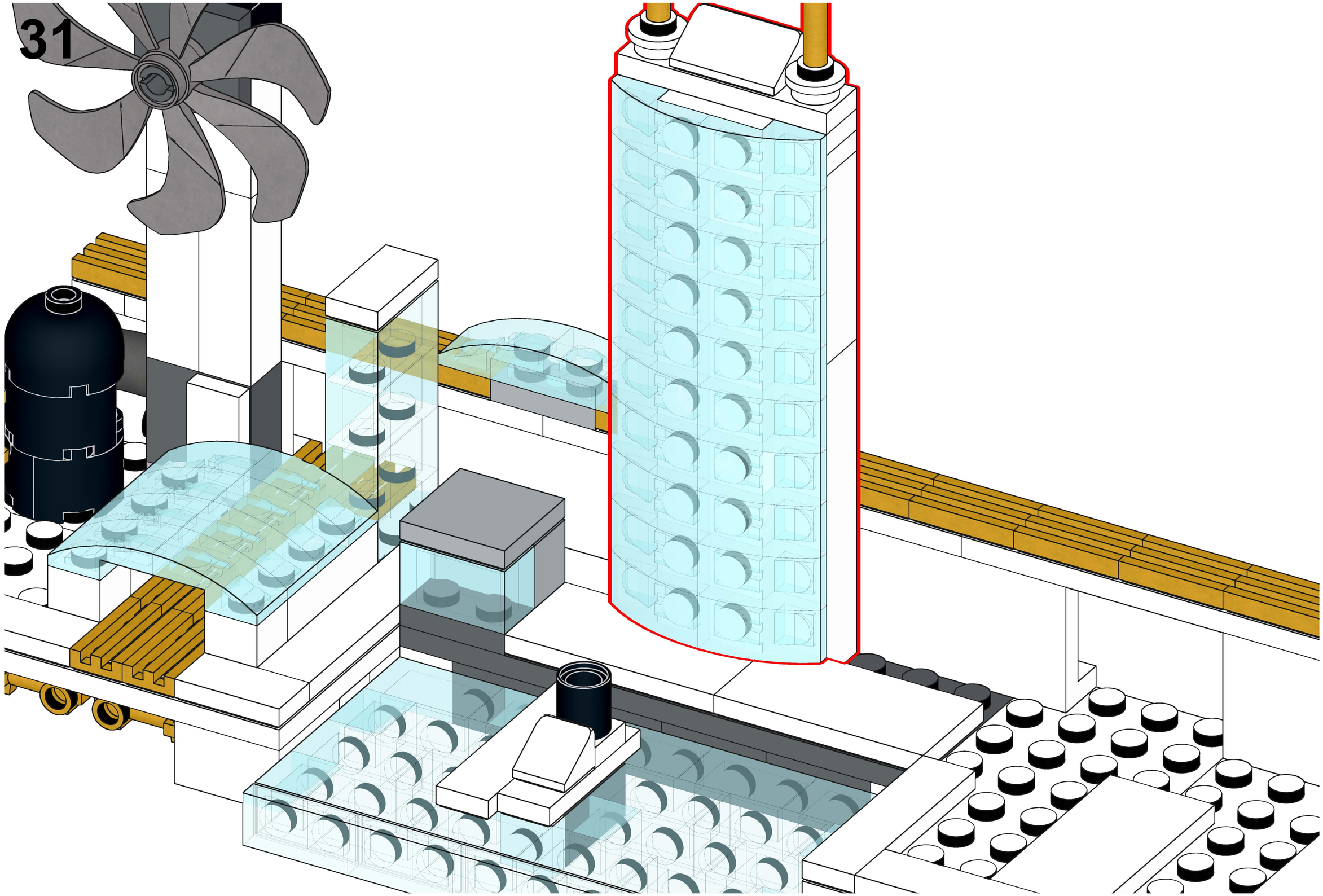
31

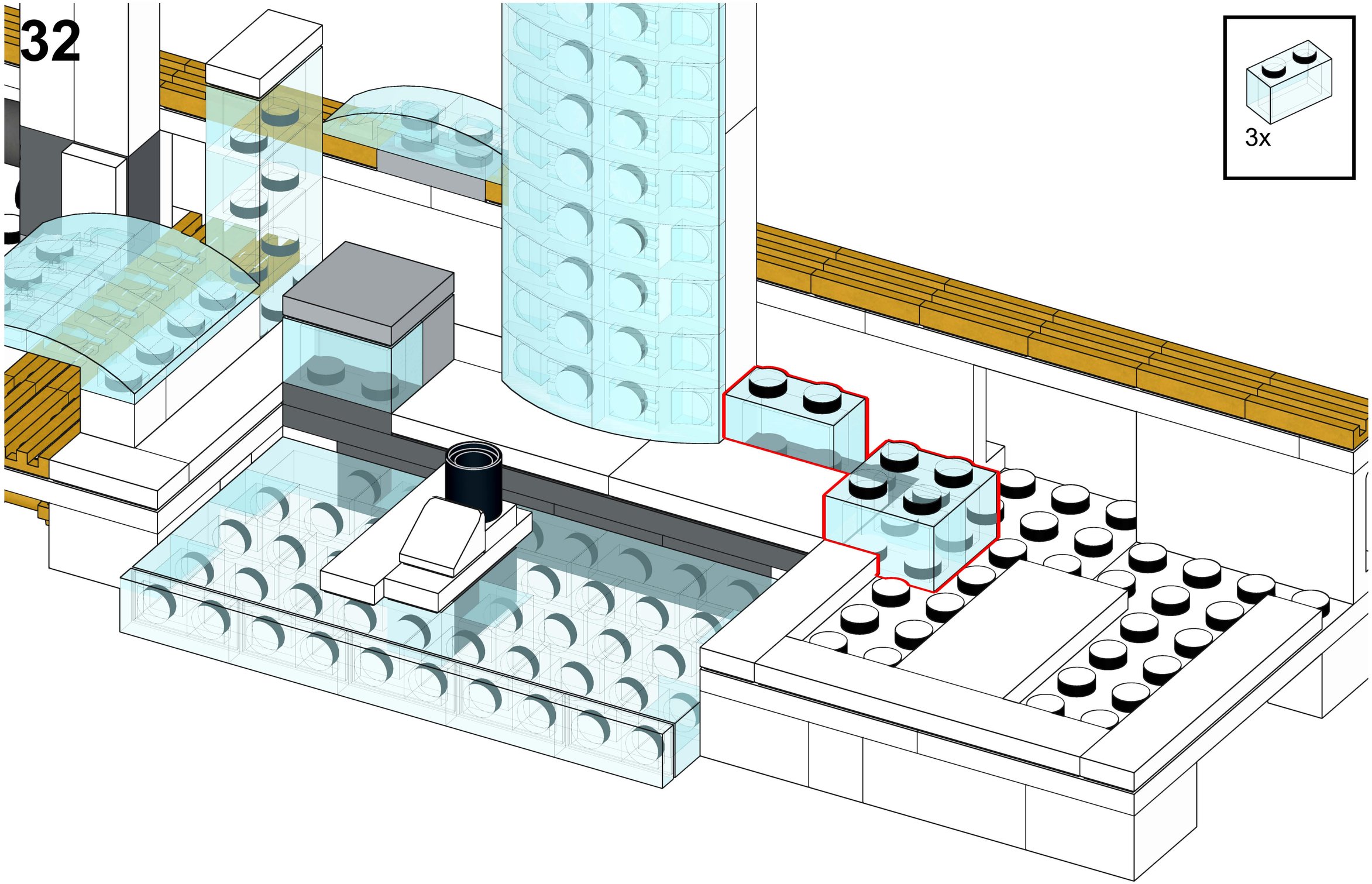
32
3x

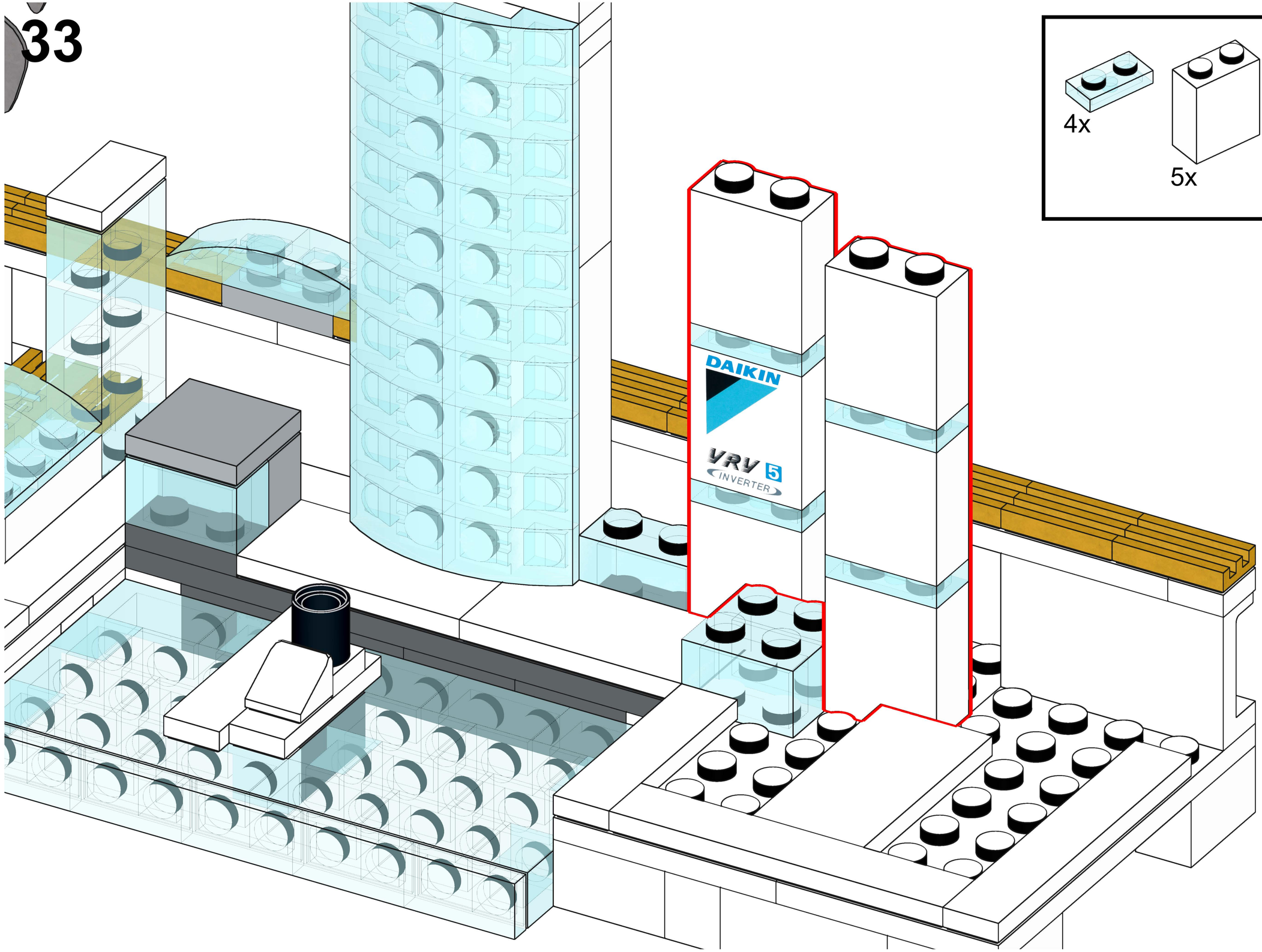
DAIKIN
VRV 5
INVERTER

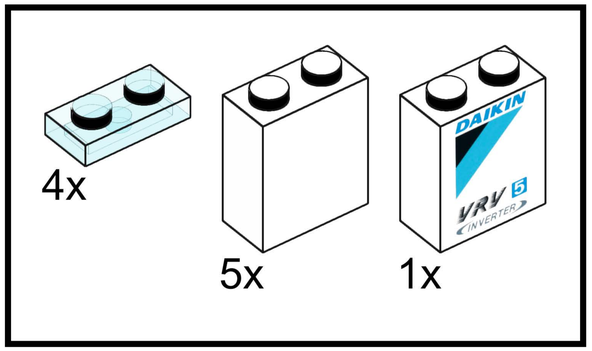
4x
5x
1x
DAIKIN
VRV 5
INVERTER

34

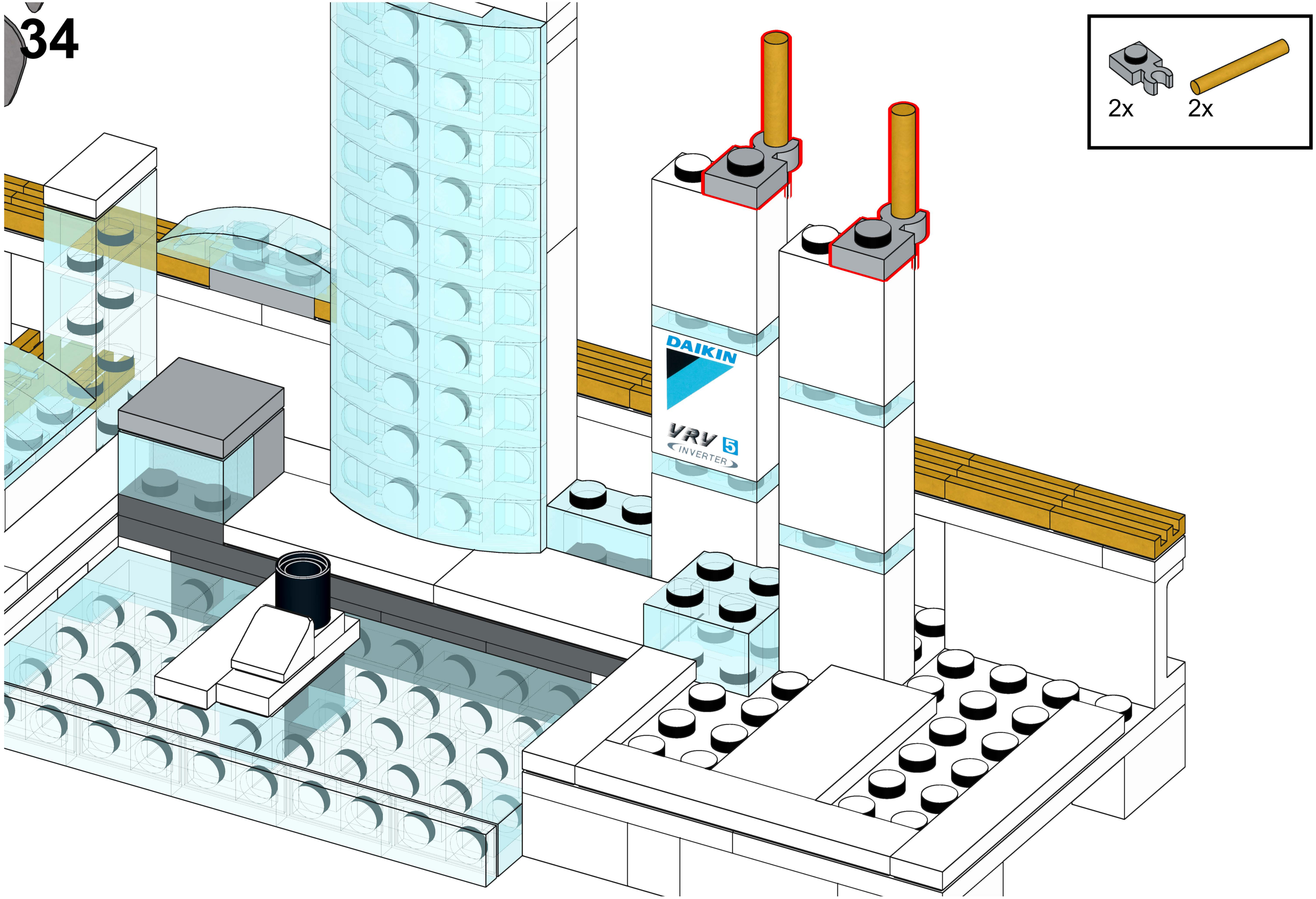

35

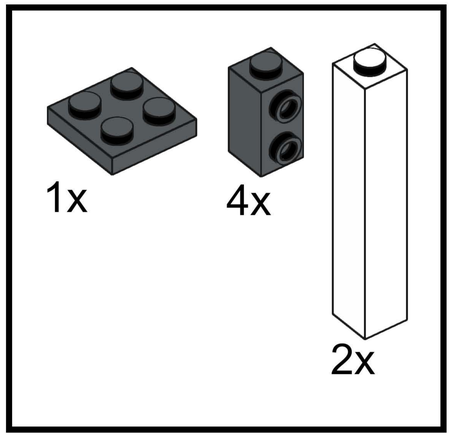

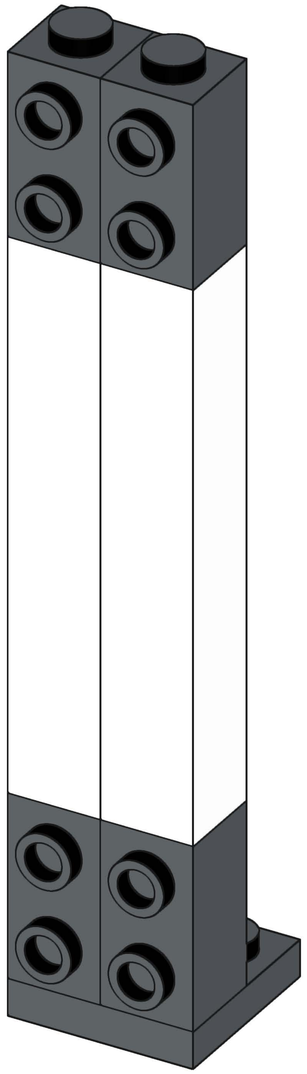

36

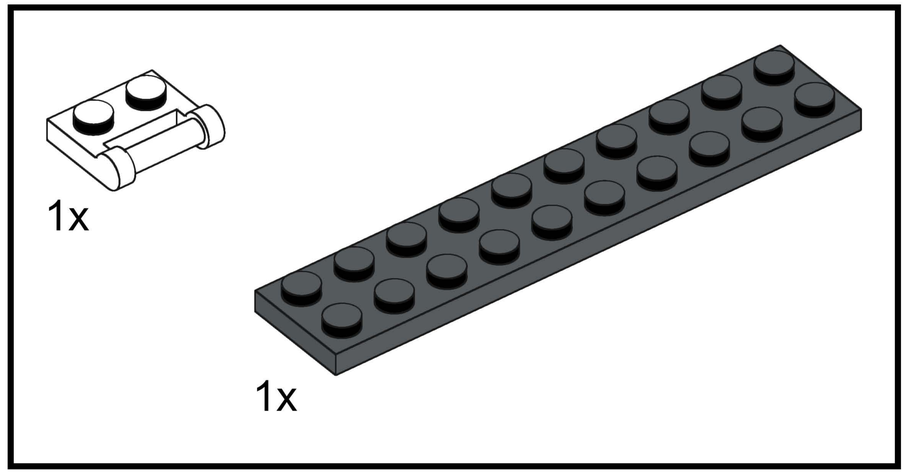

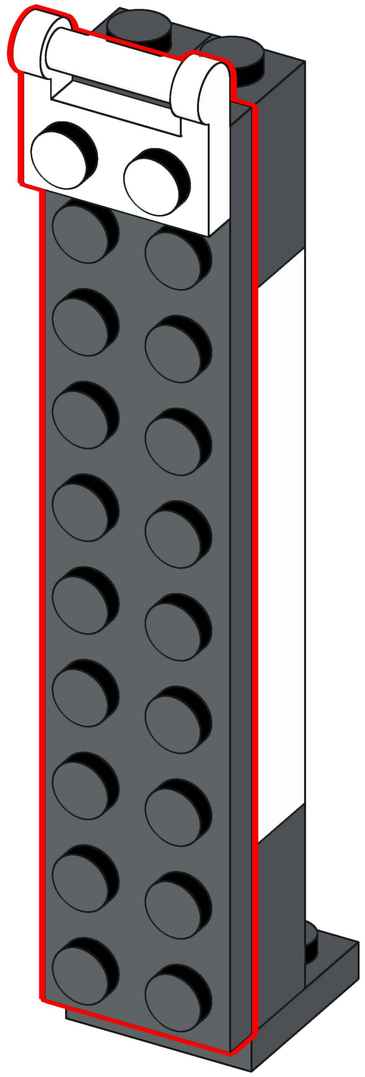

37

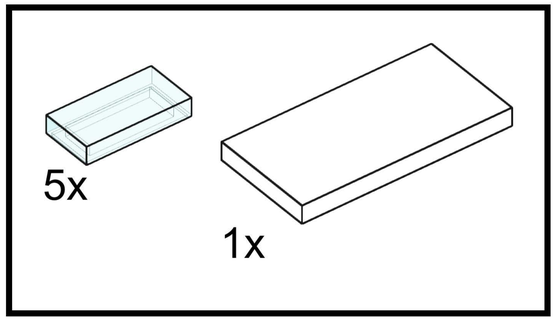

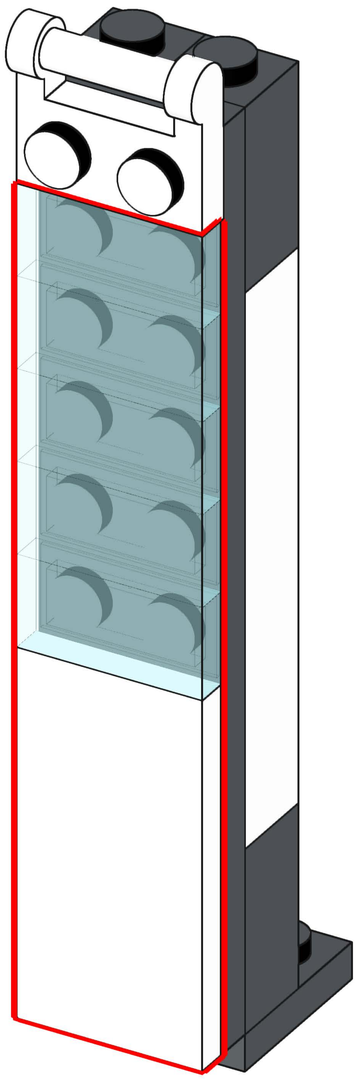

38

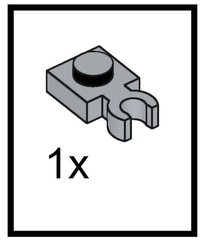

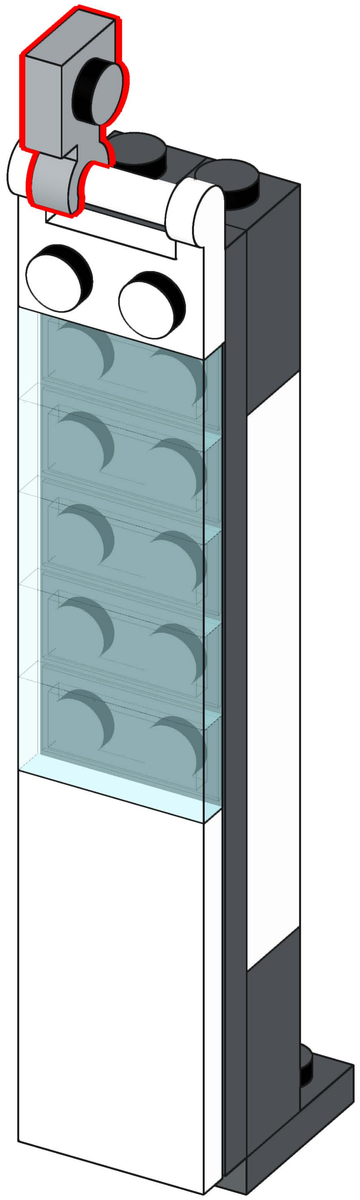

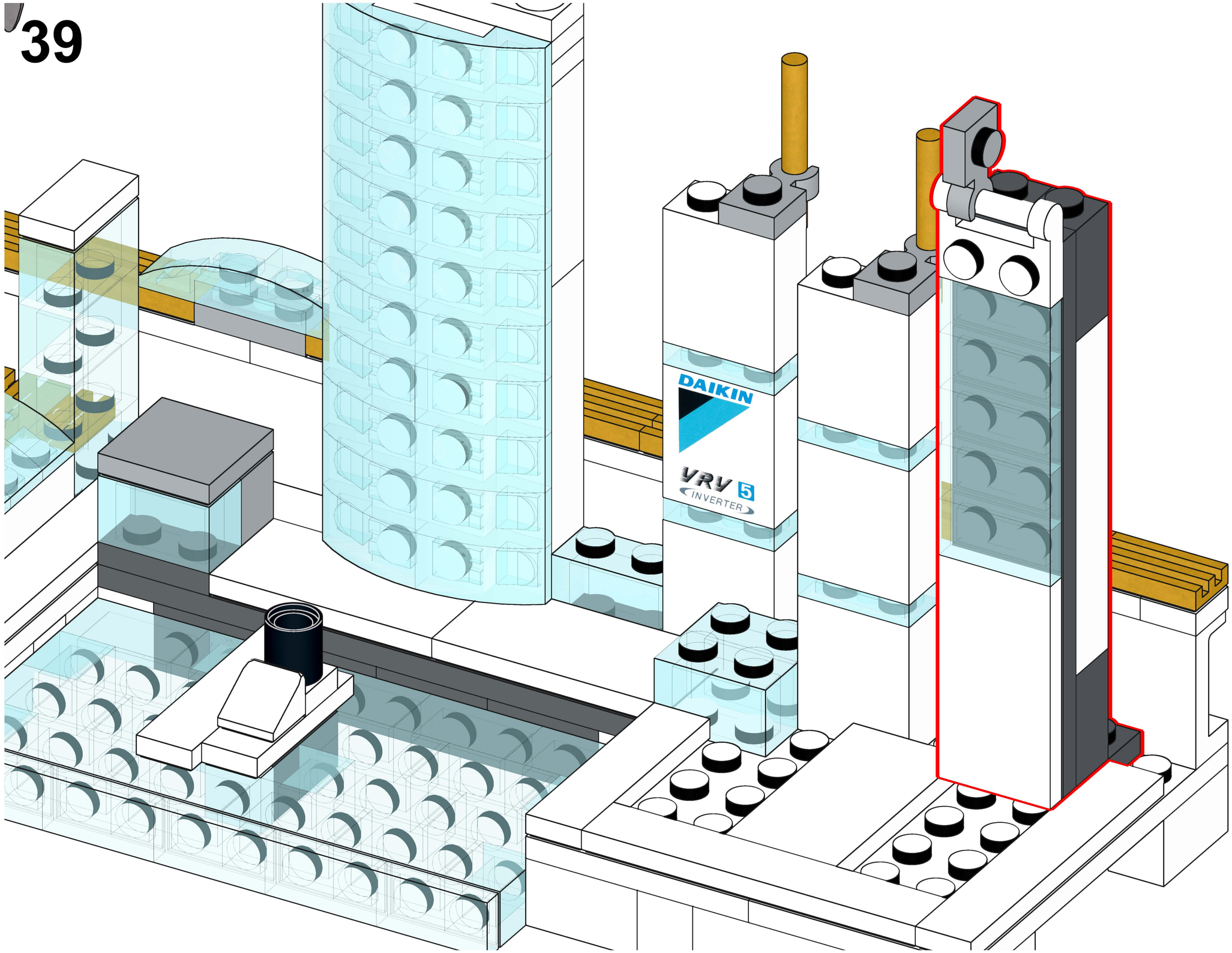
DAIKIN
VRV 5
INVERTER

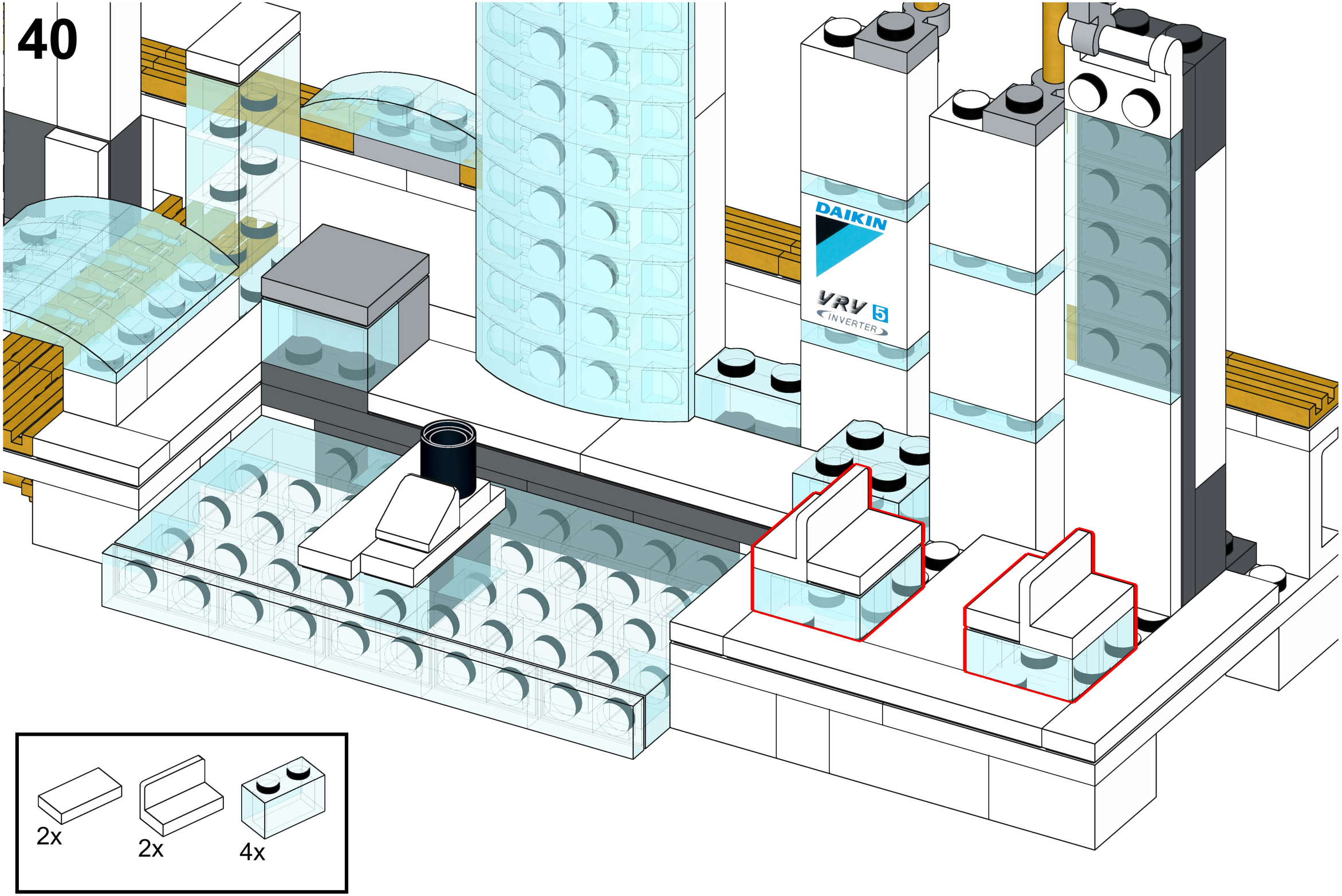
DAIKIN
VRV 5
INVERTER
2x
2x
4x